Diagnostic Framework & Purchasing Guide

# Poly Mailer vs. Mailer Box for Shipping Apparel

## The Complete Zigpac Buyer's Companion

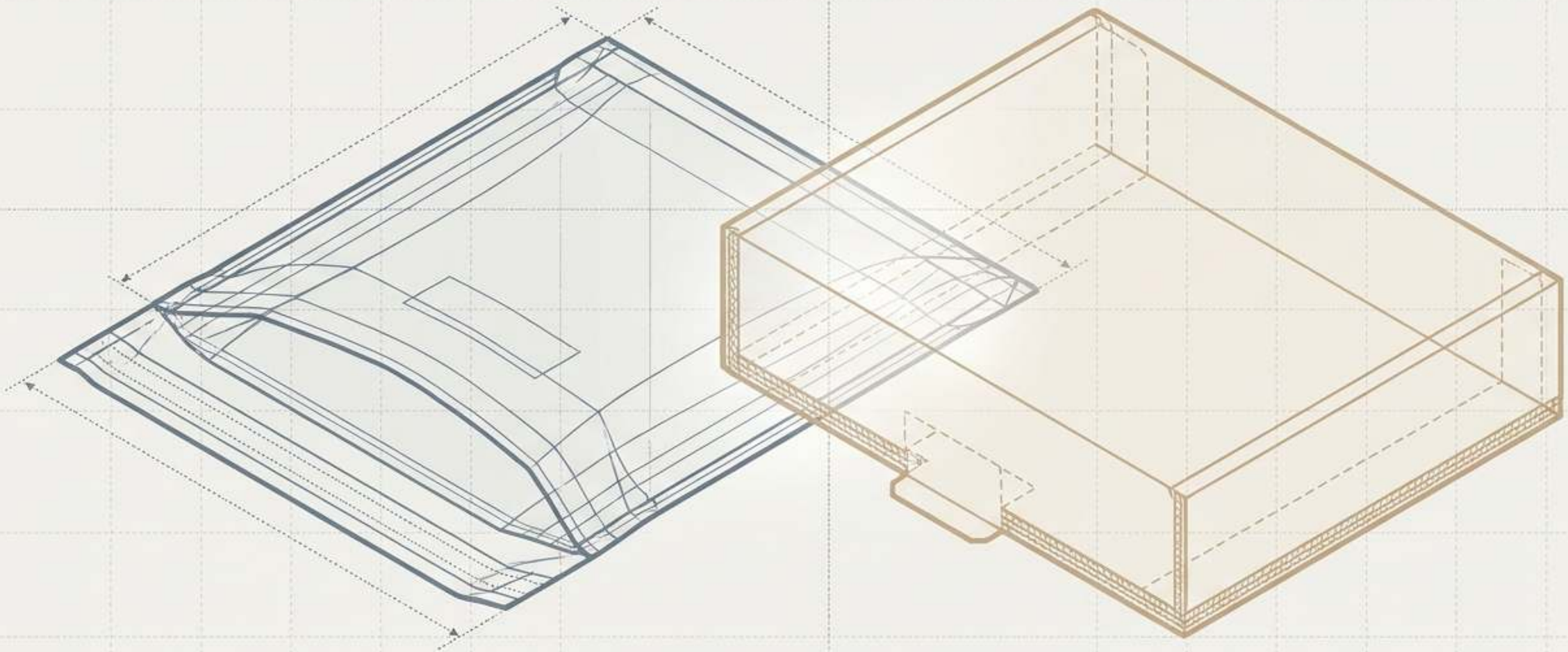

ZIGPAC

# THE UNIT-COST TRAP

The packaging question looks simple until the fulfillment invoices arrive.



**CRUSHED FIRST IMPRESSIONS:** Using flexible bags for structured gift sets results in dented products and brand damage.

UNIT COST: $0.25 | QTY: 100 | TOTAL: $25.00

**PAYING TO SHIP AIR:** Using rigid boxes for everyday T-shirts incurs fees for corrugated board, assembly labor, and dimensional weight.

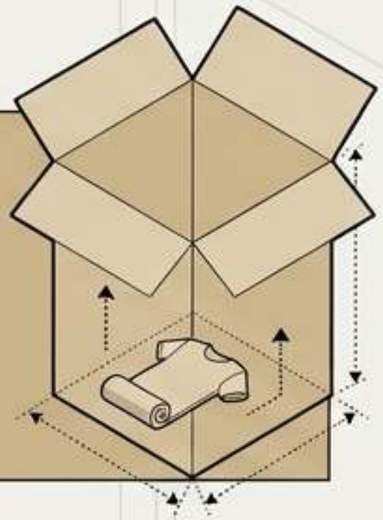

Material Waste

Assembly Labor Hours

Fuel Surcharges

Dimensional Weight Surcharges

Storage Fees

## TRUE COST

**BOTH MISTAKES ARE EXPENSIVE. BOTH HAPPEN WHEN FORMATS ARE EVALUATED ON UNIT PRICE ALONE.**

ZIGPAC

# THE 5-STEP FAIR COMPARISON FRAMEWORK

Evaluate packaging based on total delivered cost and customer outcome using real product specs, not catalog photos.



**STEP 1: DEFINE THE PARCEL.**

Record the folded garment size, weight, and any rigid inner components (gift boxes, hard tags).



**STEP 2: PRICE AT YOUR TIER.**

Compare packaging at your actual order volume, not the lowest listed catalog tier.

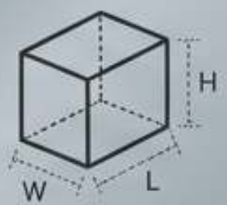


**STEP 3: MEASURE FINISHED DIMENSIONS.**

Pack a sample and measure L × W × H exactly as the carrier will bill it.



**STEP 4: ADD THE EXTRAS.**

Factor in the cost of tape, tissue, inserts, void fill, and assembly labor.



**STEP 5: SCORE THE OUTCOME.**

Evaluate required shape protection, unboxing impact, and return workflows.

ZIGPAC




# THE FLEXIBLE CONTENDER: CUSTOM POLY MAILER

Form-fitting efficiency for everyday soft goods.

**Conforms to Garment.** Ships flat, adds negligible weight, and minimizes billable volume.

**Environmental Defense.** Resists moisture and scuffs, ideal for rainy routes and porch drops.

**THE THICKNESS MYTH:** Thicker film (2.0 to 3.0 mil) adds vital tear and puncture resistance, but it does **NOT** turn a flexible envelope into a protective box. Zero structural protection against crushing.

**BEST FOR:** Folded T-shirts, hoodies, leggings, and high-volume everyday orders.

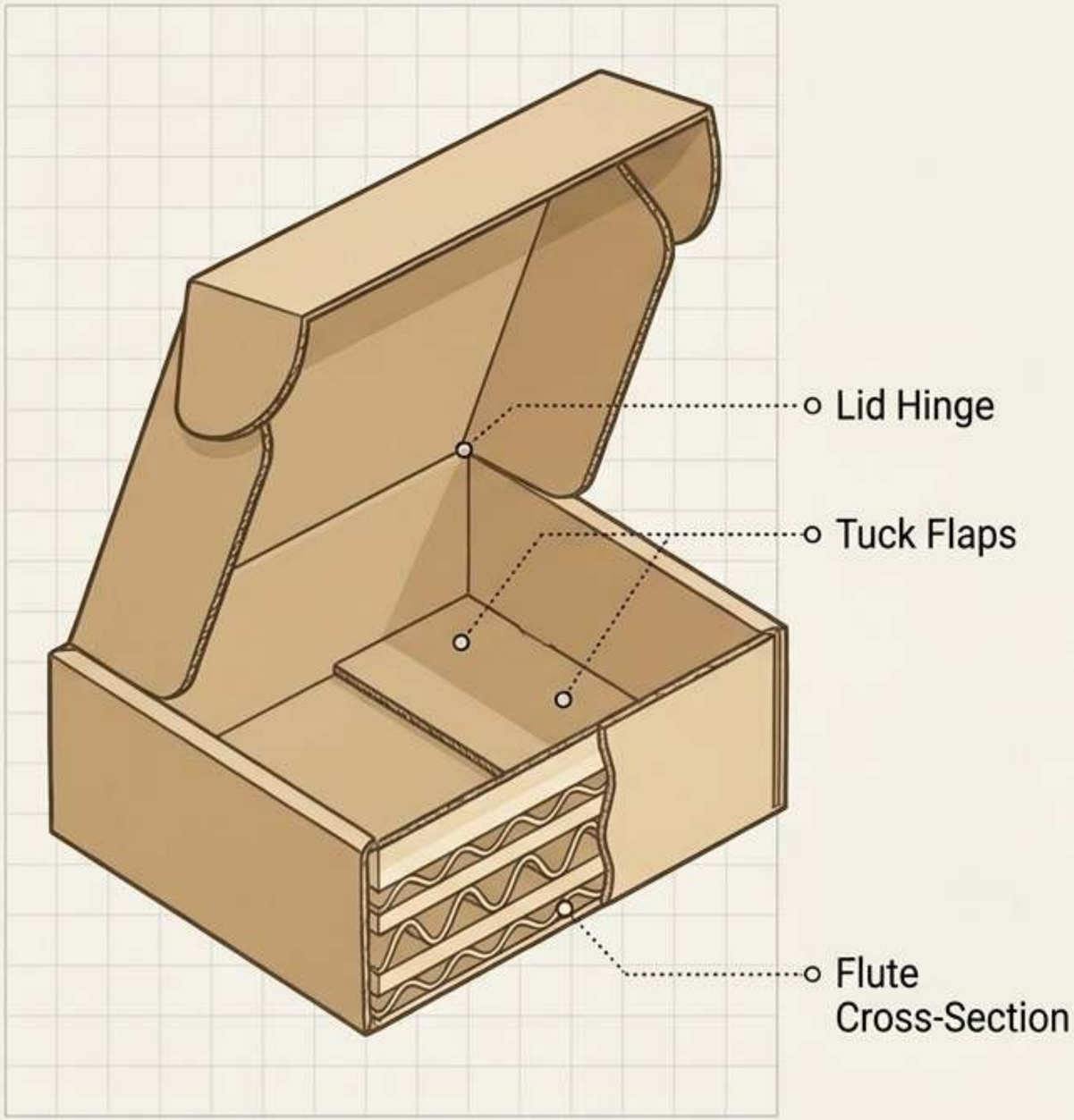


# THE RIGID CONTENDER: CORRUGATED MAILER BOX

Structural protection and deliberate presentation.

**Roll-End Tuck-Top.** Hinged lid and tuck closures create a deliberate, premium unboxing sequence.

**Flute Engineering.** E-flute offers a thinner profile with a smooth print surface; B-flute adds cushioning but increases volumetric bulk.

**OPERATIONAL REALITY:** Requires assembly. Delivered flat but requires manual folding, taping, and often void fill at the packing station.

**BEST FOR:** Gift sets, PR kits, structured caps, bundled accessories, and items requiring pristine corners.

# The Packaging Unit Cost Baseline

Comparing Zigpac November 2026 Tier Pricing

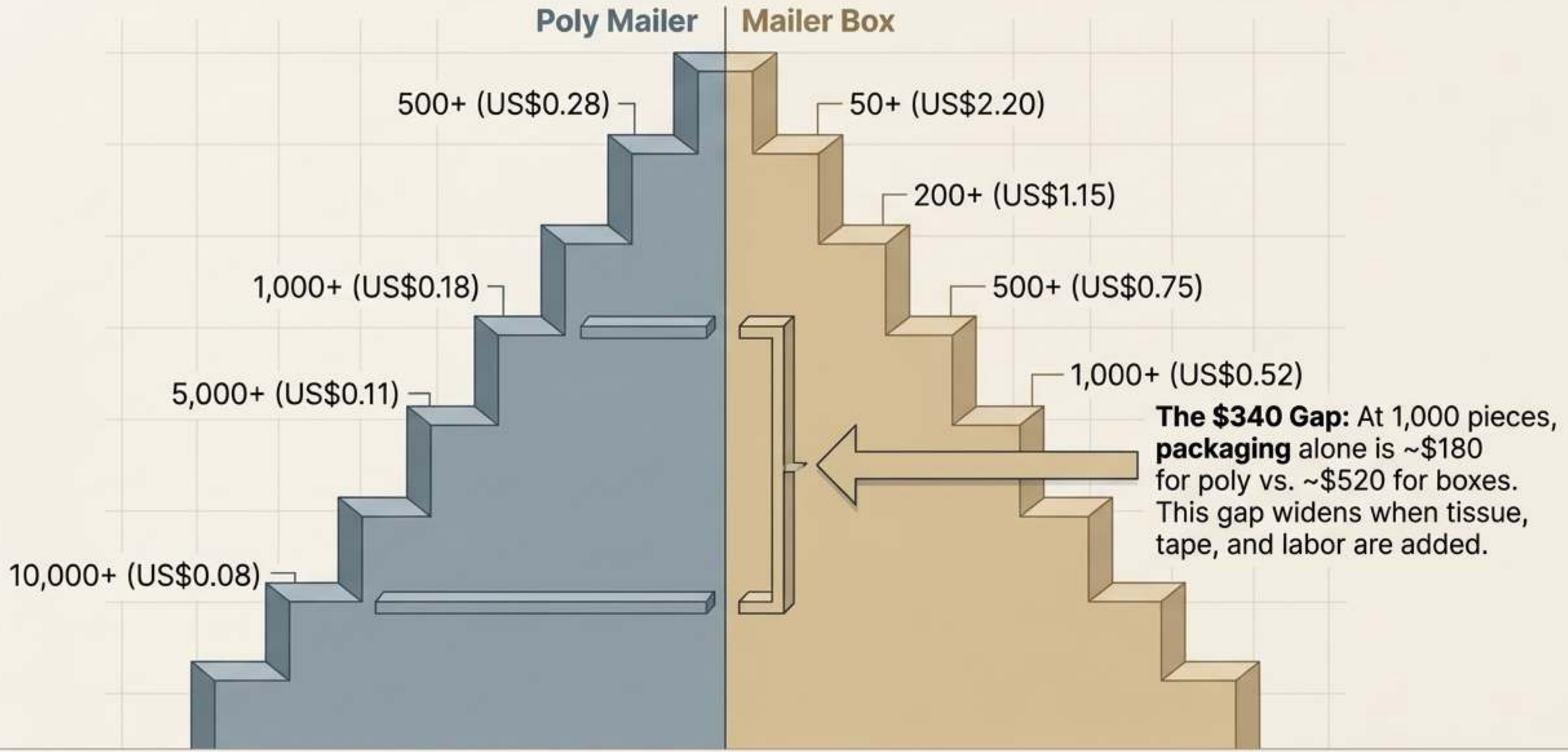


Illustrative pricing - final price, MOQ, and schedule on your quote.

ZIGPAC

# The “Air” Penalty: Dimensional Weight




**Bag Profile:** 14 × 11 × 2 inches = 308 cubic inches.
(Approx. 2.2 lb dim weight -> rounds to 3 lb).

[Length × Width × Height]
÷ Carrier Divisor

**= Billable Weight**

(Carriers bill the greater of actual vs. dimensional weight)

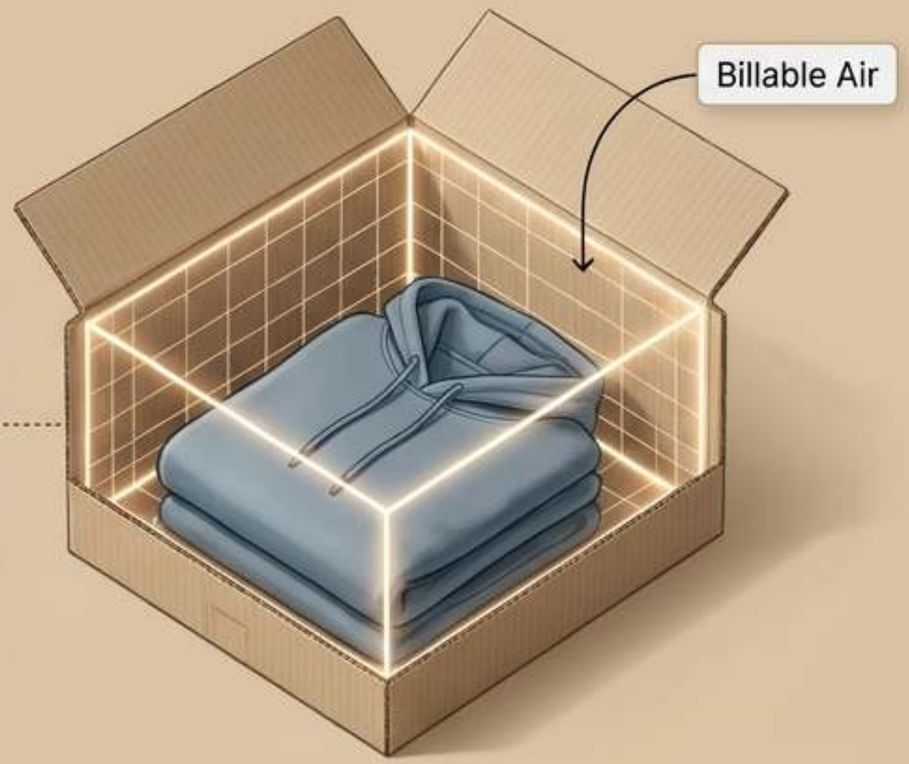


**Box Profile:** 12 × 10 × 4 inches = 480 cubic inches.
(Approx. 3.5 lb dim weight -> rounds to 4 lb).

**Takeaway:** A slimmer bag often bills at a lower tier. An oversized box or thicker B-flute board immediately increases your dimensional-weight postage exposure.

ZIGPAC

# Unboxing & Brand Perception

The ROI of Presentation (Ipsos / Paper and Packaging Board, 2018)

## Poly Mailer






Consumers who are more likely to choose paper or cardboard packaging over plastic.

**The Bag Reality:** Exterior print serves as the sole brand surface, ending in a quick tear-open experience optimized for speed, not theater.

## Corrugated Box






Consumers who agree packaging design influences their purchase decisions.

**The Box Advantage:** Exterior-only, interior-only, or full interior-and-exterior print creates a "lid-and-reveal" sequence critical for gifts and influencer unboxing videos.

ZIGPAC

# The Returns Workflow

Managing size exchanges efficiently.

## The Dual-Seal Advantage

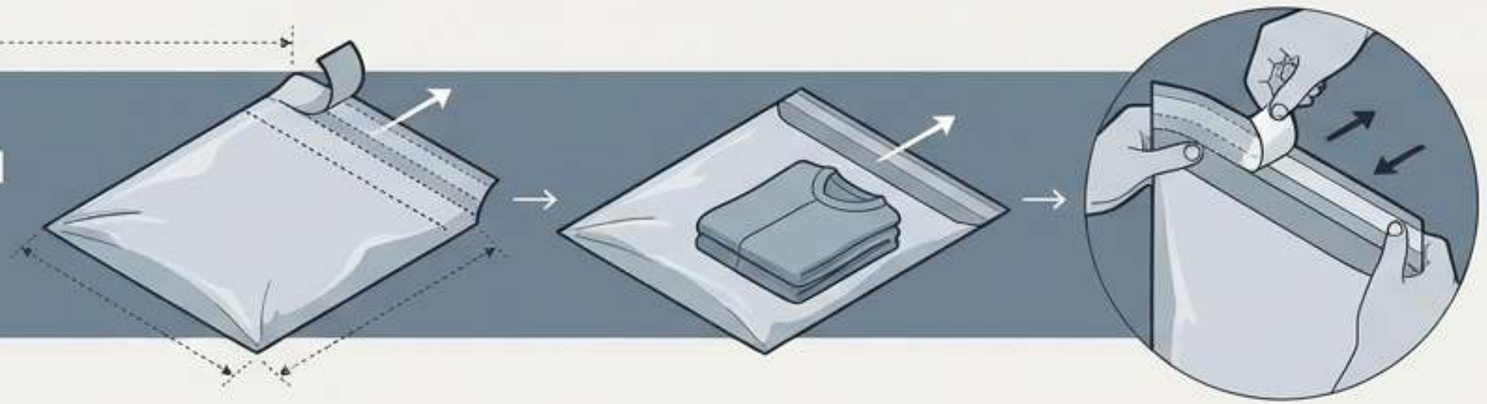

Custom Returnable Poly Mailers feature a second adhesive strip. The customer reseals the original packaging effortlessly.

(Zigpac listed tiers from US$0.33 at 500+ down to US$0.10 at 10,000+).

## The Box Limitation



Mailer boxes can travel back, but require the customer to open them **without tearing the flaps** and to **own packing tape**.
A missing tape strip turns a return into a support ticket.

# Recycling Routes & Compliance Reality

Where materials go, and what you are legally allowed to print.



**Compliance Warning 1 (FTC Green Guides):**
Unqualified "recyclable" claims are only legal if **facilities are available to 60%+ of consumers where sold.** A resin ID code (ASTM D7611) is **NOT** proof of recyclability.




**Path 1 (Corrugated Box):**
Commonly collected curbside. Generally straightforward end-of-life, though local programs vary.

**Path 2 (Poly Film):**
Generally NOT accepted curbside. Eligible films require Store Drop-off (per How2Recycle).

**Compliance Warning 2** (California SB 343 / SB 54):
Strict limits on chasing-arrows symbols.
Strict limits on chasing—symbols.
Single-use packaging moving toward recyclable/compostable mandates by 2032.

**Zigpac Policy:** No unverified eco-claims. Print only what your documentation legally support

ZIGPAC

# The Master Diagnostic Matrix

| | Poly Mailer | Mailer Box |
|---|---|---|
| Unit Cost (1k tier) | US$0.18 | US$0.52 |
| Postage Exposure | Low - conforms to shape | High - fixed volume + billable air |
| Protection | Moisture/scuff only | Shape & crush protection |
| Unboxing | Quick tear-open | Lid-and-reveal theater |
| Returns | Frictionless 2nd strip | Requires customer tape |
| Storage & Speed | Space-saving flat stacks, fill-and-seal | Bulky storage, fold-fill-tape |
| MOQ (Zigpac) | 500 | 50 |

(Disclaimer note: Final MOQ and pricing on you

ZIGPAC

# The SKU Decision Tree

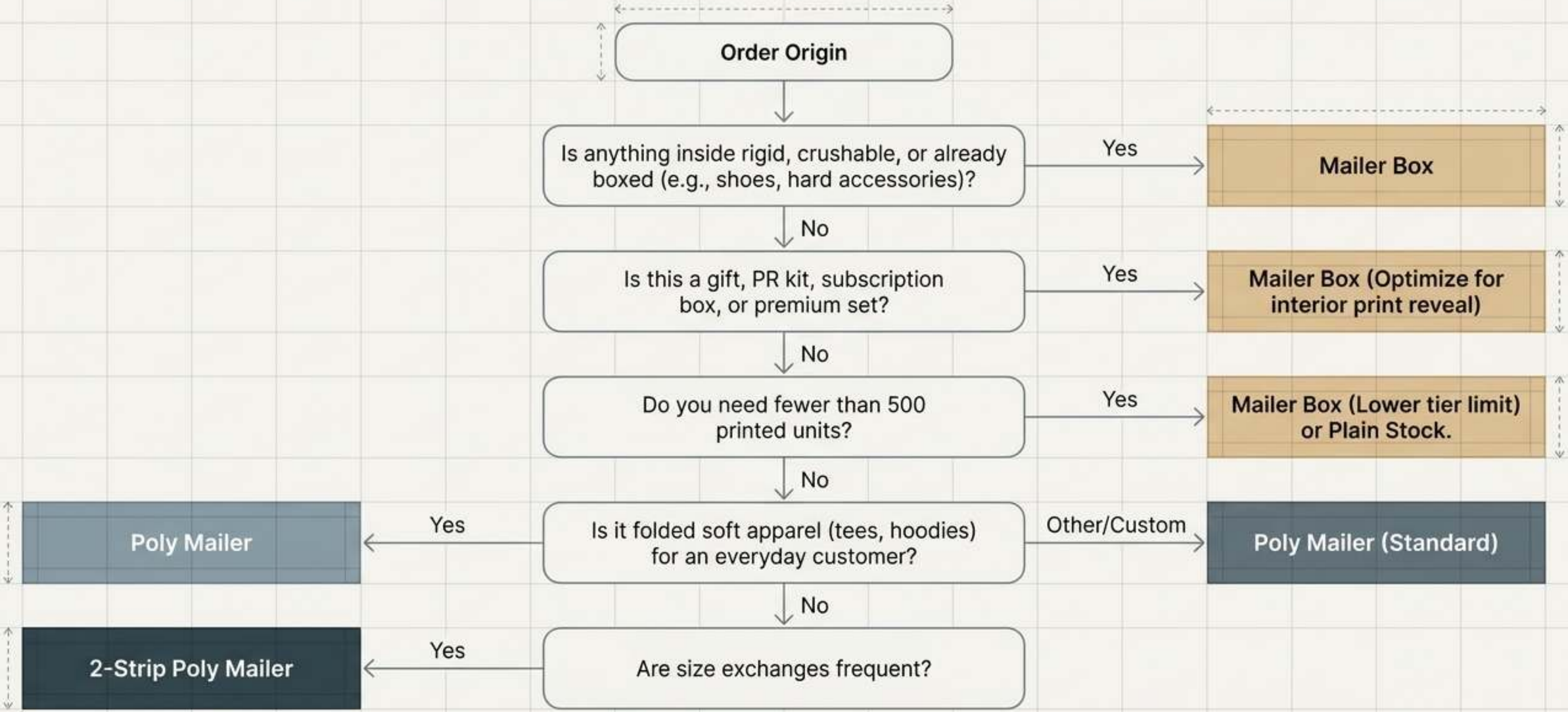

# The “Aha Moment”: The Hybrid Program

The best apparel brands don’t choose just one format. They match the packaging to the order type.







## The Strategy:

Printed Poly Mailers cover everyday folded soft goods orders, capturing massive savings on unit cost and postage scale. Printed Mailer Boxes are reserved for smaller runs of gifts, product launches, PR kits, and premium bundles, where the margin justifies the unboxing theater.

## The Benefit:

Keeping artwork consistent across both formats reads as a single premium brand. Managing both through one supplier (Zigpac) ensures one proofing cycle and one unified schedule.

# Next Steps & Prototyping

Test your actual garments before bulk production.

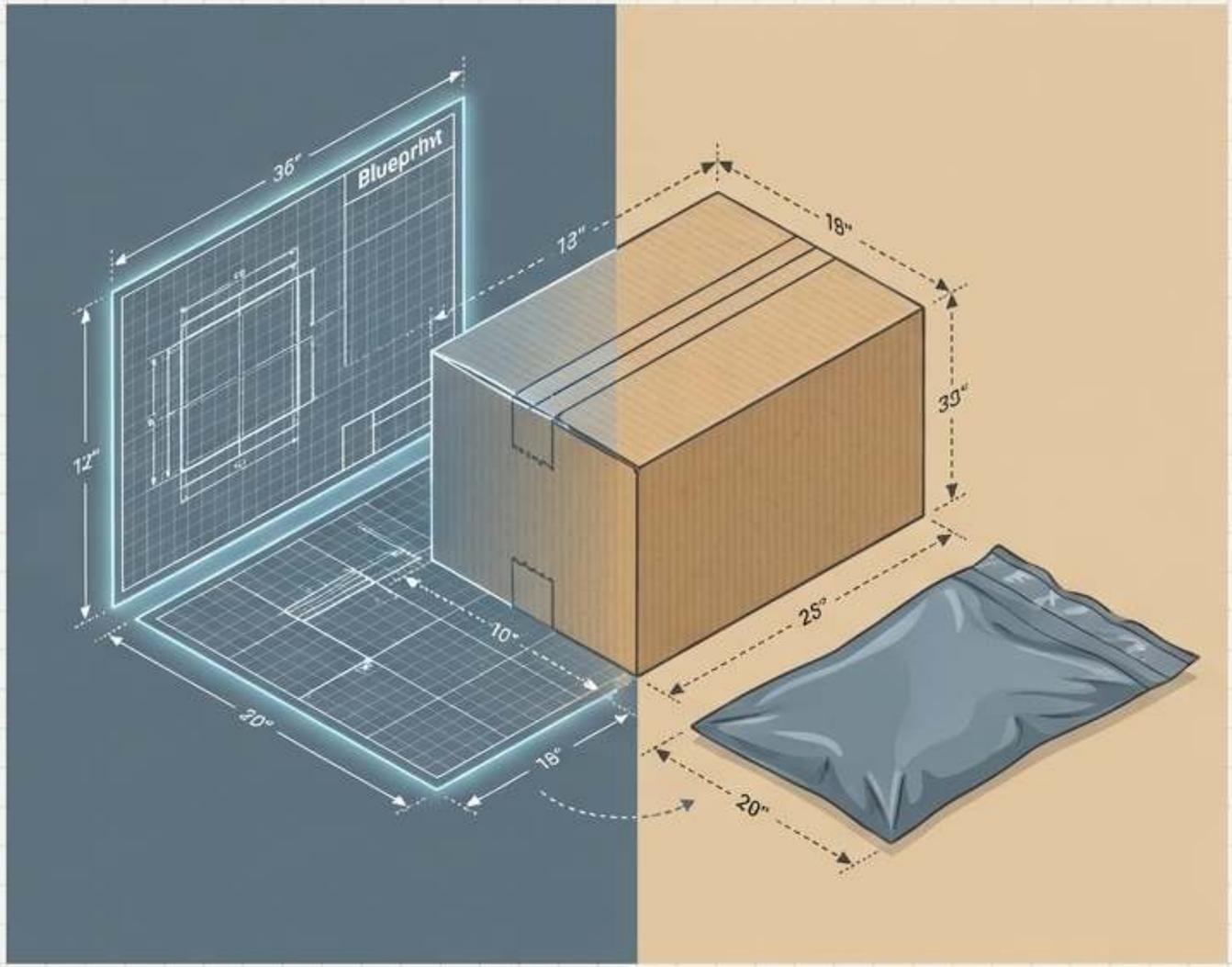


## Prototyping Path

Every order receives a free eProof. Zigpac recommends requesting physical samples (US$5–$30) to test packing, fold lines, and dim-weight with your actual apparel.
Standard lead time is 7–10 days.

## Action Items for a Hybrid Quote:

1. Send folded garment size & weight.
2. Provide monthly order volume split by SKU type.
3. Submit brand artwork and destination zip codes.

**Zigpac will confirm exact size, material, final MOQ, price, and schedule.**

# Key Takeaways



**1. Unit Cost Reality:** Poly mailers cost significantly less per unit at every shared tier (e.g., $0.18 vs $0.52 at 1,000+).

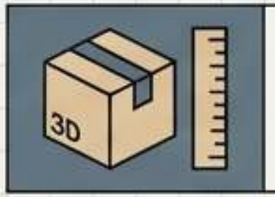


**2. Billable Weight:** Postage savings depend heavily on the measured parcel volume (dimensional weight), not just the empty packaging weight.

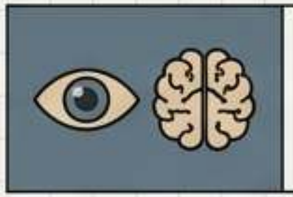

**3. Purchase Perception:** Packaging design heavily influences brand perception, with board generally preferred for premium unboxing.

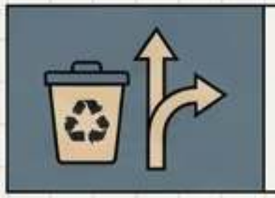

**4. Divergent Recycling:** Film (store drop-off) and corrugated (curbside) follow entirely different recycling routes.



**5. Claim Compliance:** Unqualified “recyclable” claims are strictly regulated (FTC 60% rulele). Print only what your documentation can defend.

ZIGPAC