THE BLUEPRINT: SPECIFYING CUSTOM FRIDGE MAGNETS

A Buyer's Companion Guide for Epoxy, Acrylic, and Tin Formats

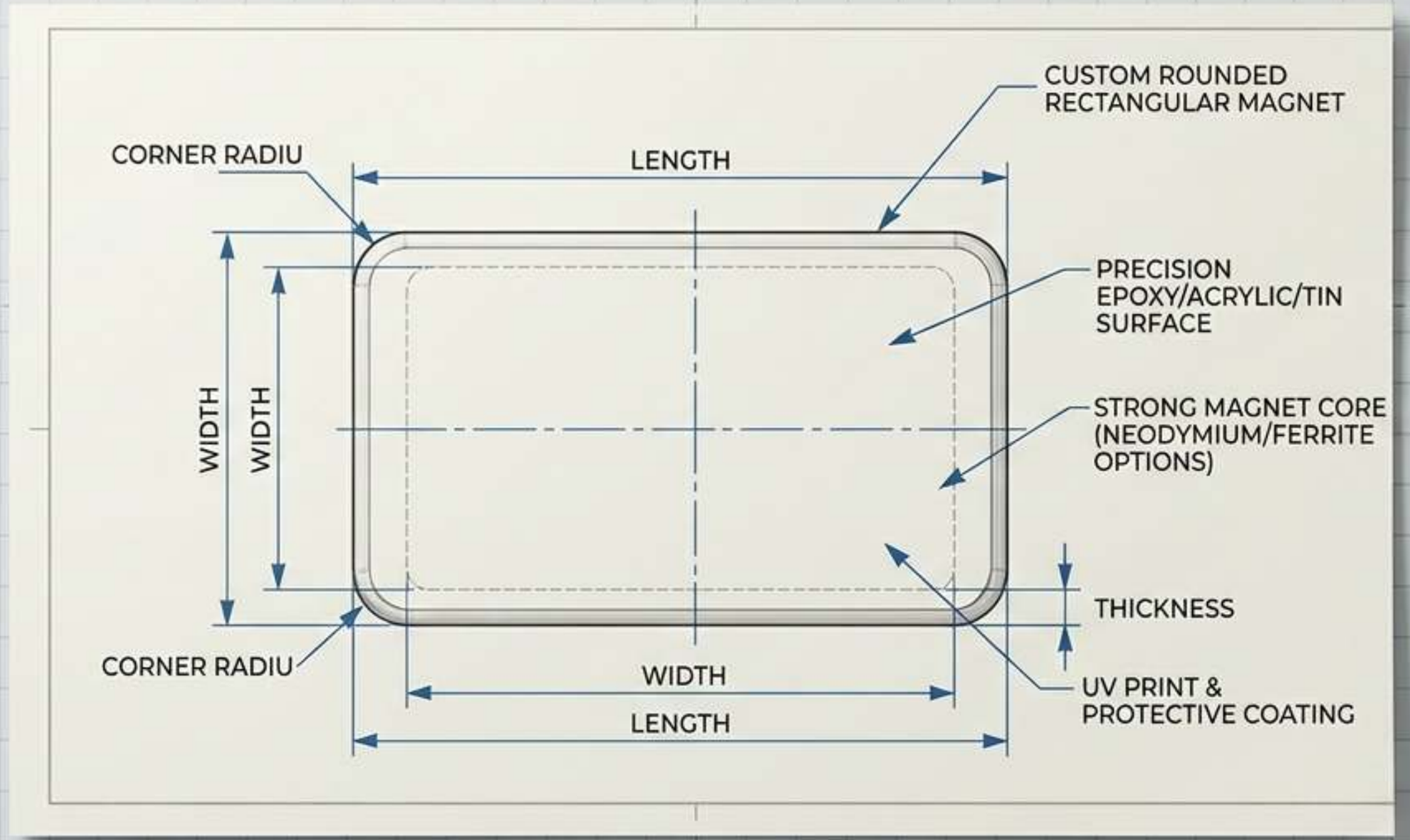

ENGINEERING ZIGPAC SIGN-OFF

ZIGPAC



Navigating a Growing Market With Fragmented Data

The global custom fridge magnet market is projected to grow 6.5% annually, reaching $700M by 2033 (up from ~$450M), with commercial uses driving 38.7% of demand.

ZIGPAC

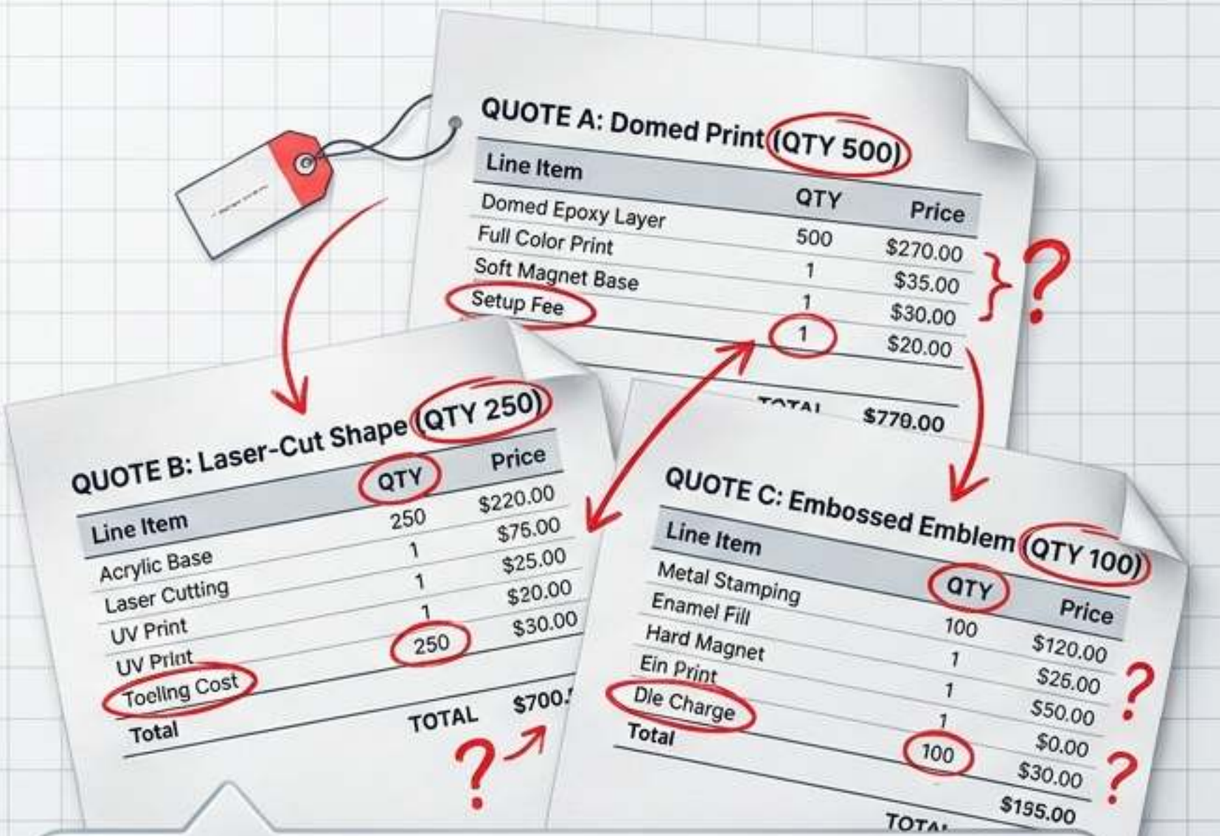

The Dilemma:

Buyers frequently receive three completely different quotes for the same project: one for a domed print, one for a laser-cut shape, and one for an embossed emblem. Each carries conflicting starting quantities, hidden setup fees, and different production schedules. Generic comparison charts fail because they evaluate someone else's materials, not your specific project.

ZIGPAC

Format Anatomy: The Printed Epoxy Dome

Construction Details

Reactive resins (ASTM D1763 classification) used as a clear, glossy cover sealing the printed artwork.

No silicone molds are required, though custom outlines may incur setup charges.

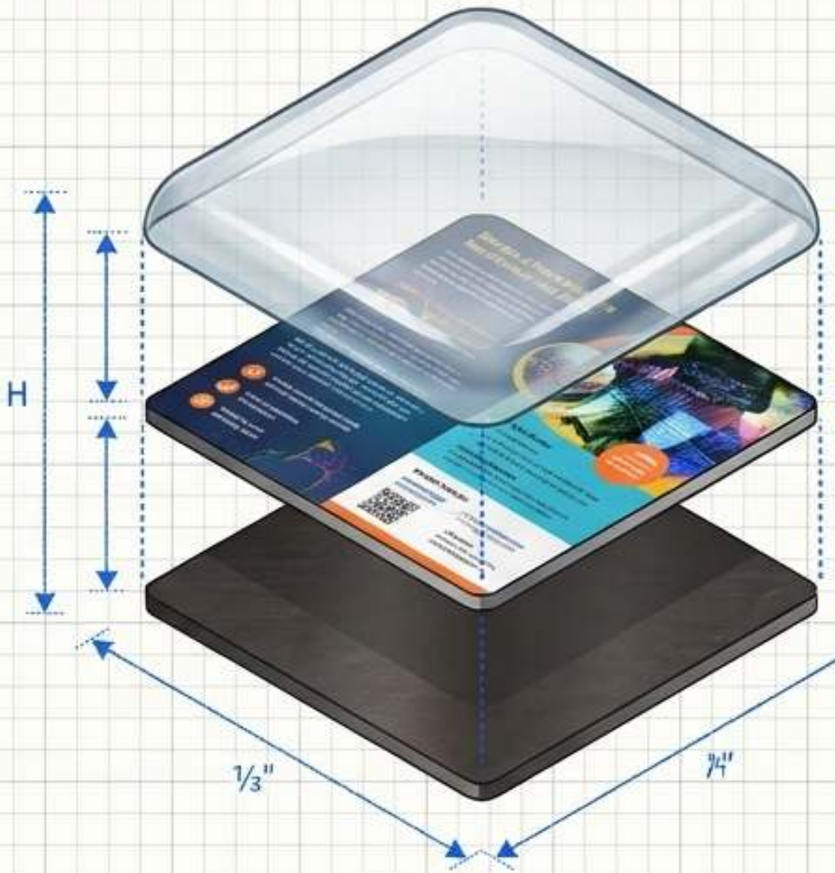

- Layer 3: Clear Epoxy Dome (Glossy Finish)
- Layer 2: Printed Artwork (Full Color)
- Layer 1: Magnetic Backing

VISUAL FIT

Ideal for photos, color gradients, and small text.

The dome adds weight and a rounded, premium finish.

LOGISTICS

Standard production 7–10 days.

Price tiers begin from 50 pcs (final MOQ on quote).

Format Anatomy: UV-Printed Acrylic

Construction Details

Two distinct jobs: the UV print carries the detail, while the laser-cut outline sets the rigid silhouette.

A white ink underprint makes colors opaque; areas left without ink remain clear, turning transparency into a design feature.

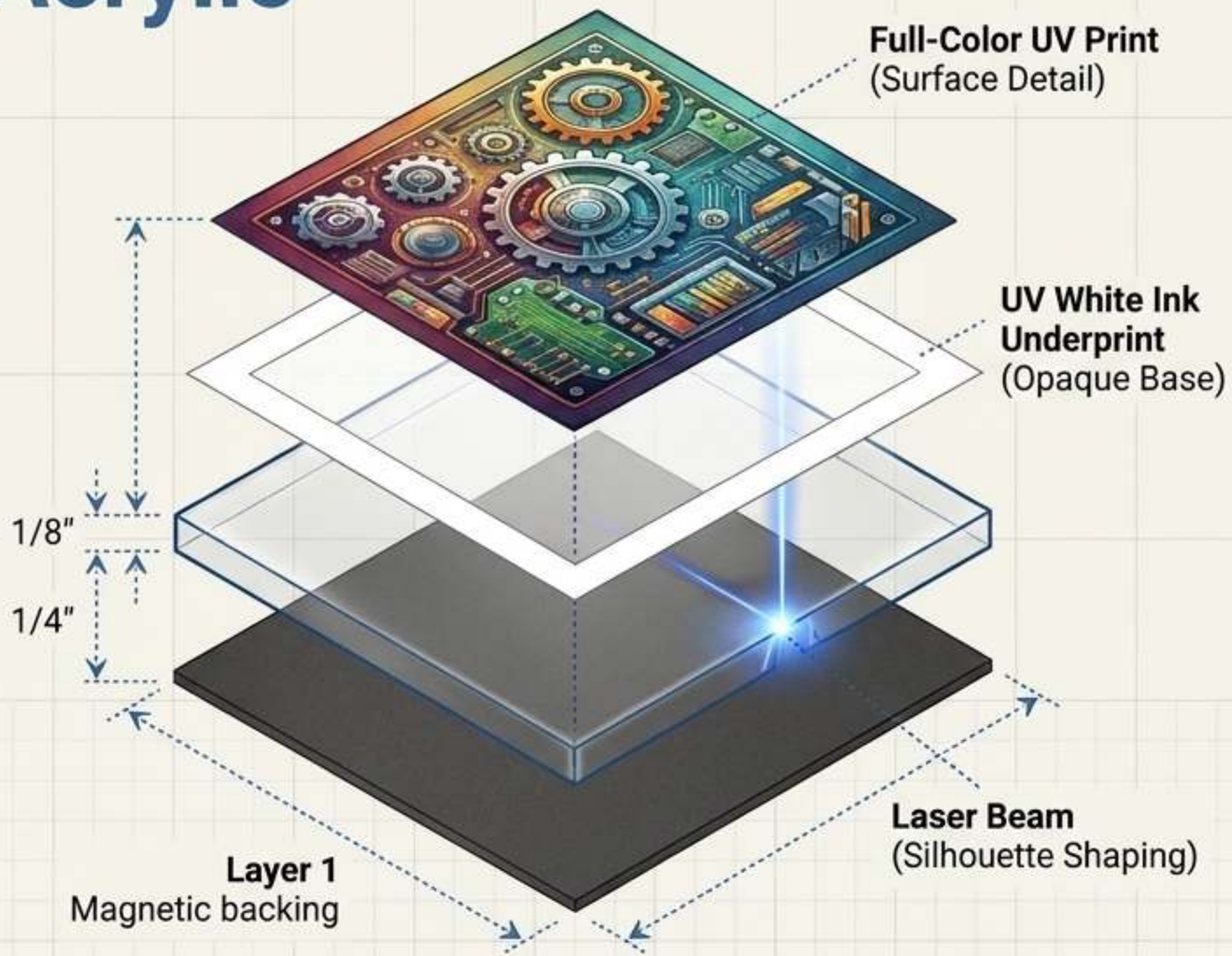

VISUAL FIT

Optimal for cut-to-shape silhouettes and designs requiring clear, unprinted areas.

LOGISTICS

Standard production 7–10 days.

Price tiers begin from 50 pcs.

Verify which side the ink sits on to ensure backing doesn't obscure rear-printed art.

ZIGPAC

Format Anatomy: Stamped and Embossed Tin

Construction Details

Built from tinplate (tin-coated steel, not solid tin).

The face carries both the print and the physically embossed relief, pressed together in a mold before a separate magnetic back is applied.

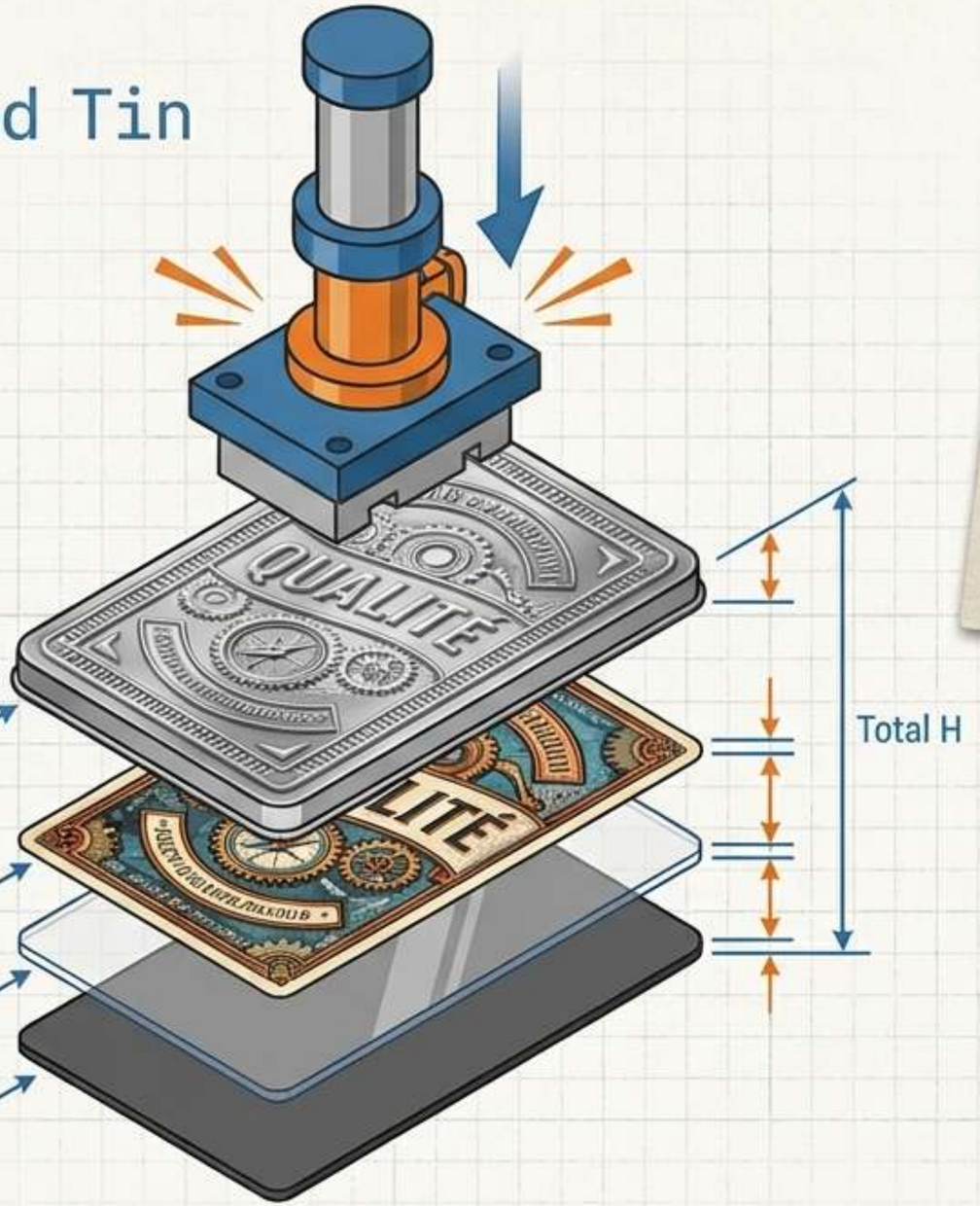

Layer 4 (Top): Stamped metallic tinplate cover featuring raised, 3D embossed relief on its surface

Layer 3: Paper insert with printed art

Layer 2: Clear film layer

Layer 1 (Bottom): Dark magnetic backing

VISUAL FIT

- Superior for raised metal emblems, bold outlines, and borders.
- Text and fine details must remain on the flat printed layer, away from the formed boundaries.

LOGISTICS

- Standard production 10-15 days (allowing time for tooling).
- Price tiers begin from 100 pcs (final MOQ on quote).

16:9

ZIGPAC

The Economics of Volume: Live Tier Baselines

The price gap between formats is marginal. At 500 pieces, the total spread is only US$25. Tooling, packaging, and freight will dictate final costs more than the raw material choice.



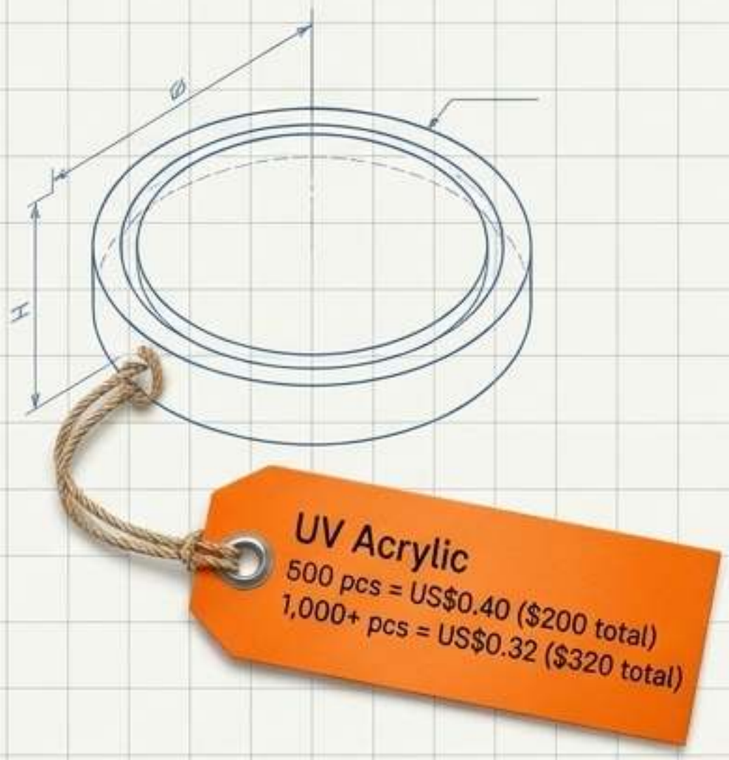

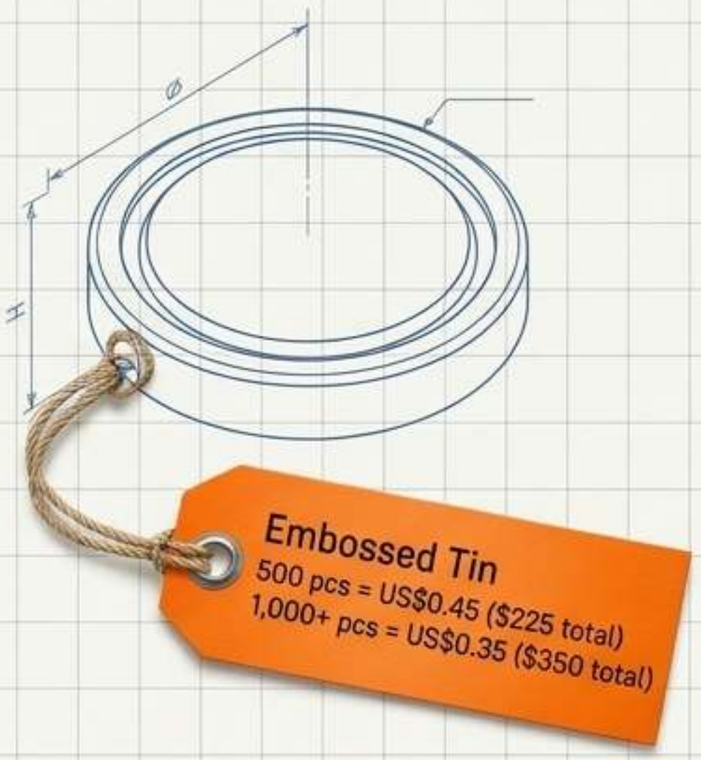

Bulk Note: 5,000-piece runs are quoted separately; multiplying the 1,000+ rate provides a ceiling reference only (e.g., ≤ US$1,750 for Epoxy/Tin). Prices based on Nov 2026 List.

ZIGPAC

The Tier Trap: Why 900 Pieces Costs More Than 1,000

The Paradox

At the 500+ rate, 900 epoxy magnets list at US$378.

However, moving to the 1,000-piece tier drops the unit price, making 1,000 magnets cost only US$350.



The Actionable Rule

Ordering 1,000 pieces is cheaper or equal to smaller orders once you cross these thresholds:

- Need more than 830 Epoxy? Order 1,000.
- Need more than 800 Acrylic? Order 1,000.
- Need more than 780 Tin? Order 1,000.

ZIGPAC

Calculating Landed Cost Beyond the Unit Price

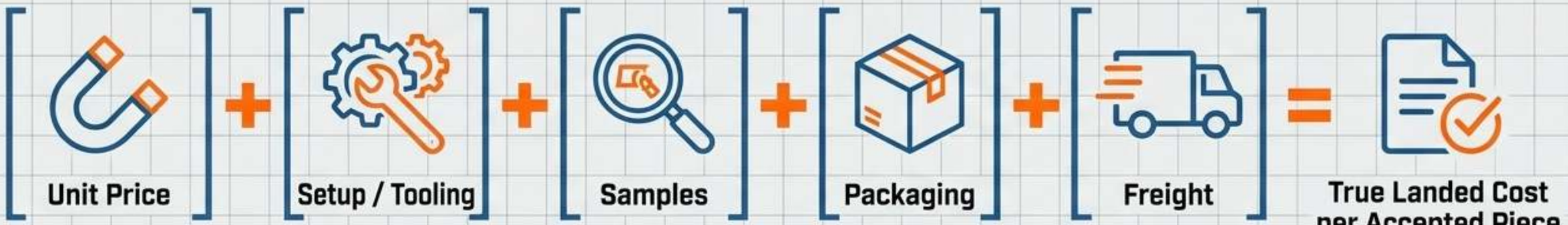

Setup Fees:

Outlines for custom epoxy and laser-cut acrylic may carry setup charges.

Tin Tooling:

Tin requires custom embossed tooling per design. Ensure you ask if tooling is retained for reorders and request an itemized scope.

Packaging:

Standard bulk vs. individual packaging drastically impacts volume and freight.

The Golden Rule: Divide your total landed cost only by the number of pieces that pass your quality sample standard.

ZIGPAC

The Inspector's Lens: Physical Sample QA Checklist

A free digital eProof confirms layout, but physical samples (**US$5–30**) are the cheapest point to catch physical defects.



Epoxy Inspection

- Check for trapped bubbles, dust, or marks over key artwork.
- Inspect edge finish, lifted backing, and scan QR codes on the physical dome (not the proof).



Acrylic Inspection

- Inspect under angled light for surface scratches and cracked edges.
- Distinguish removable protective film marks from actual defects. Ensure white underprint backs all opaque colors.



Tin Inspection

Evaluate the sharpness of the relief definition, print alignment over the raised areas, and check for rough formed edges.

ZIGPAC

Environmental Realities & Holding Performance

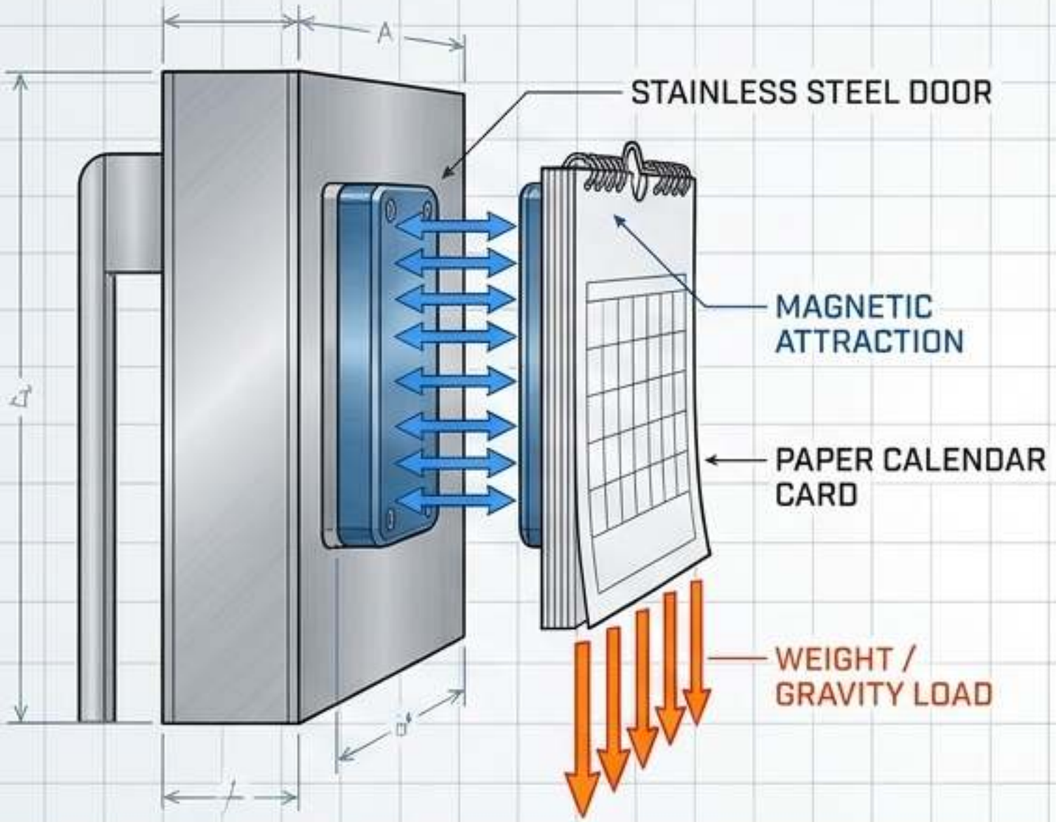

Holding Strength: The face material (epoxy, acrylic, tin) does not dictate magnetic strength. A dome adds weight, not power. Test the fully assembled sample with your actual load (e.g., menu, calendar) on the final display surface.



Environmental Limits:

None of these formats are established as waterproof, scratch-proof, or UV-resistant.

Care Protocol:

Plan as indoor display items only. For epoxy, use gentle wiping with no abrasive cleaners, prolonged sunlight, or impacts. If outdoor use is critical, submit it as a specific test request in your RFQ.

ZIGPAC

The Federal Safety Imperative (16 CFR Part 1262)

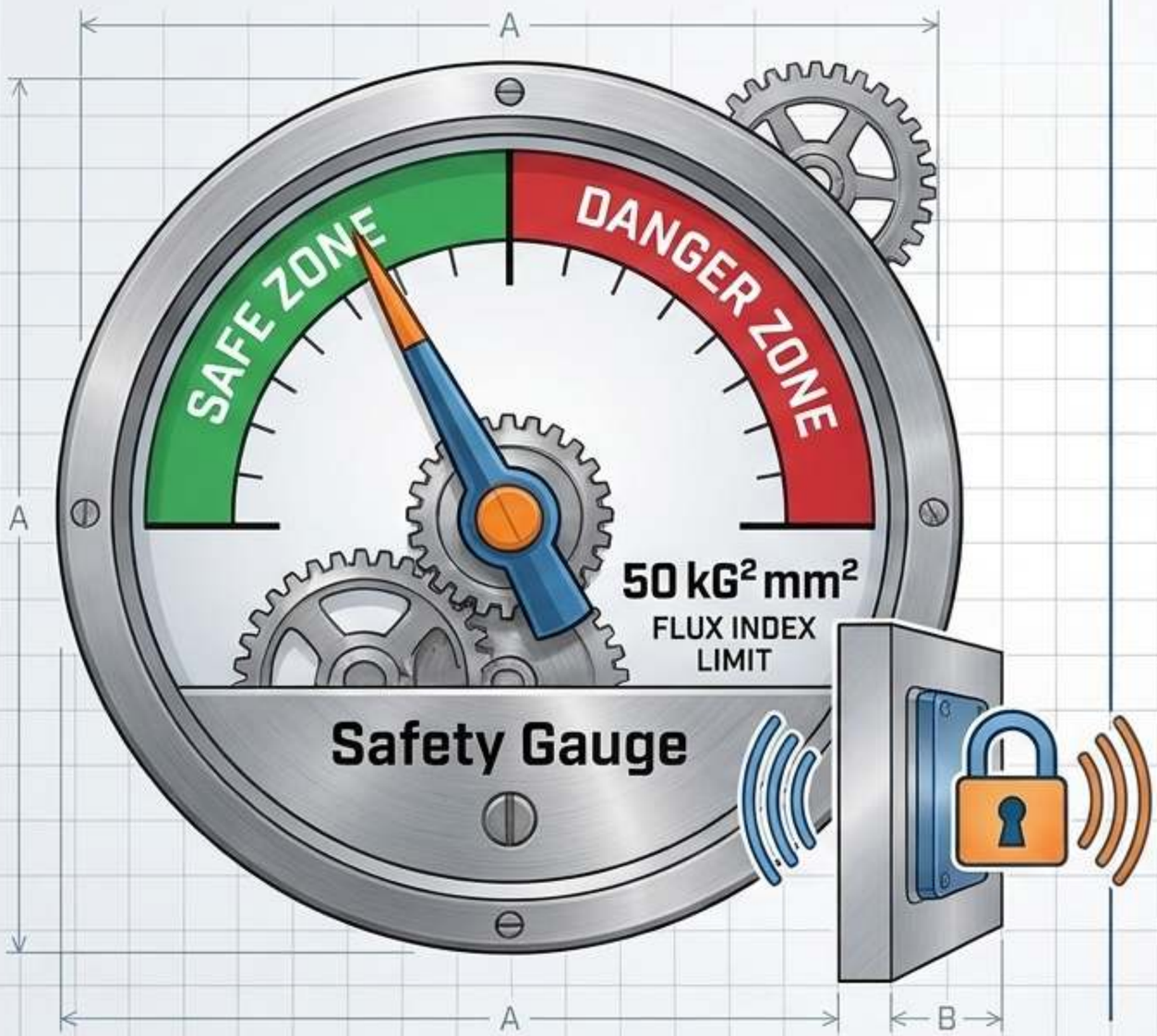

The Risk

The CPSC estimated **26,600** emergency-treated magnet ingestions from 2010–2021. Refrigerator magnets are not exempt (e.g., Sept 2026 recall of 4,640 units).

The Law

For products marketed for entertainment, mental stimulation, or stress relief, small separable magnets must have a flux index below **50 kG² mm²** (enforced since Oct 2022).

The Buyer's Action:

If your giveaway might reach children, **physically test the sample** to confirm the magnetic backing is **permanently attached** and cannot be pried off the face.

ZIGPAC

Synthesis: The Face Does Not Dictate The Function

THE FACE

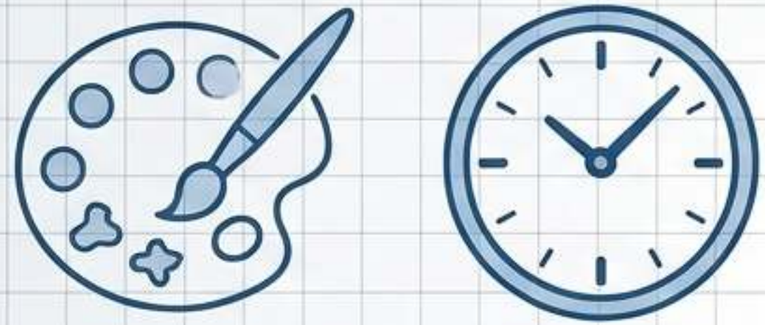

Art, Brand, & Timeline
Epoxy, Acrylic, or Tin

THE BACK

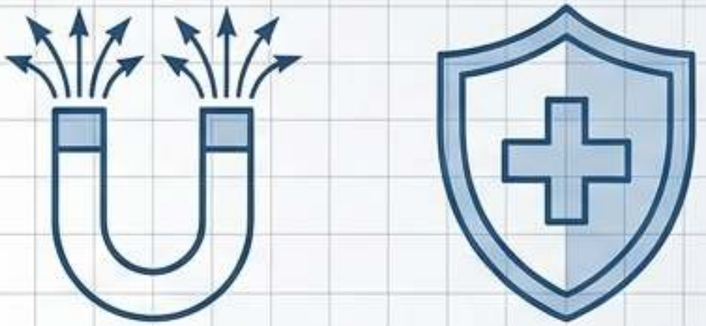

Holding Power, Safety, & Utility
The Backing Mechanism

The Insight: Buyers often agonize over which format is ‘stronger’ or ‘safer.’ The reality? Holding strength, safety compliance (flux index), and baseline unit costs are entirely divorced from whether you pick epoxy, acrylic, or tin.

The Conclusion: Choosing your format is purely an artwork and timeline decision, not a performance decision. Pick the face that fits your logo; engineer the back to fit your fridge.

ZIGPAC

Diagnostic Flow: Which Format Fits Your Campaign?

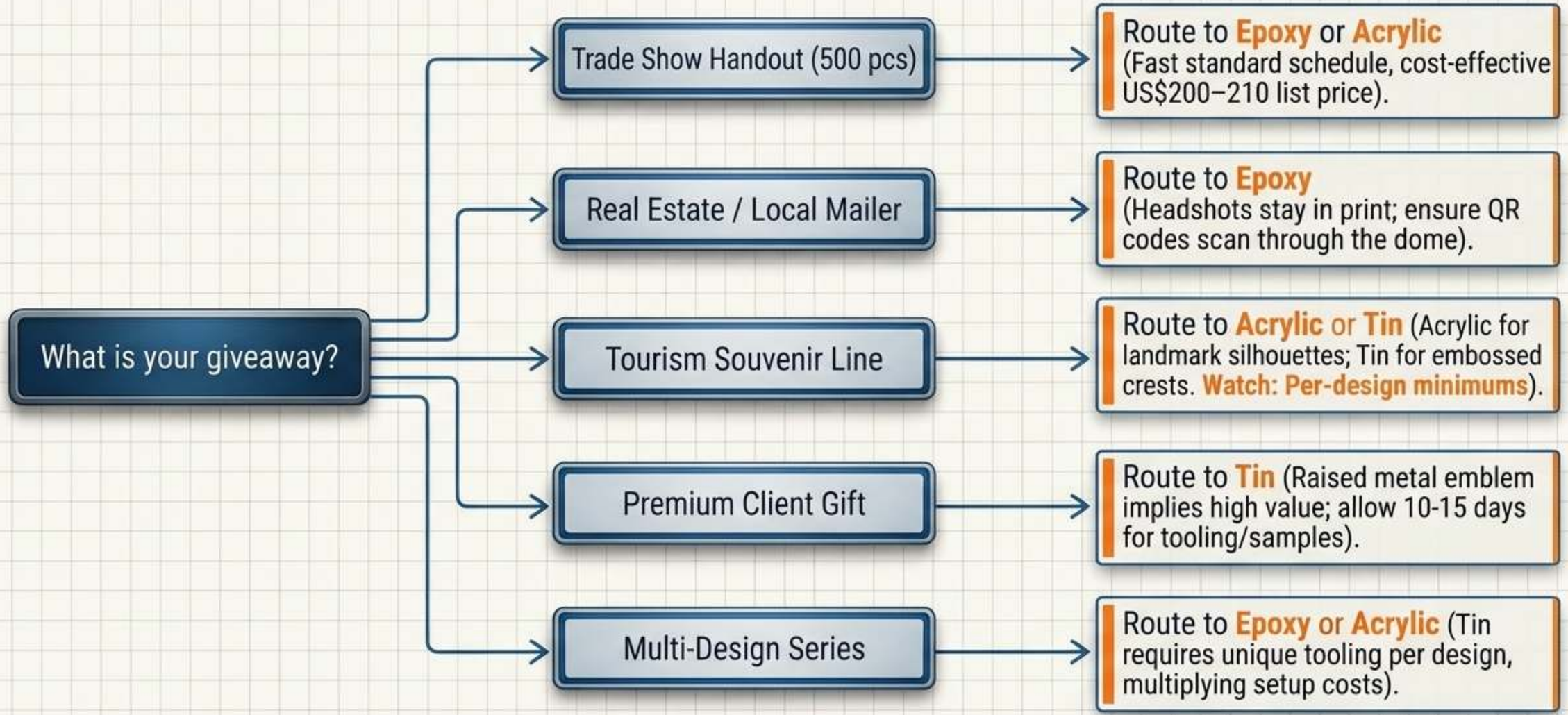

ZIGPAC

The Master Blueprint: Format Comparison Matrix

	Printed Epoxy Dome	UV-Printed Acrylic	Stamped/Embossed Tin
Construction	Clear raised dome	Rigid face, laser-cut	Metal face, raised relief
Best Artwork	Photos, gradients, small text	Silhouettes, clear areas	Emblems, outlines, borders
List Price 1,000+ Nov 2026	**US$0.35**	**US$0.32**	**US$0.35**
Setup / Tooling	Outlines may carry setup	Custom shapes may carry setup	Tooling needed per design
Standard Production	7–10 days	7–10 days	10–15 days
Crucial Sample Check	Bubbles, QR scan	Cracks, film marks	Relief definition, alignment

ZIGPAC

The Perfect RFQ Execution Checklist

ZIGPAC

The **8-Point** Quote Blueprint

[1] **Artwork files** (mark raised/flat areas if requesting Tin).

[2] **Preferred format** (Epoxy, Acrylic, or Tin).

[3] **Finished size** in millimeters.

[4] **Quantity** per design AND total number of designs.

[5] **Target display surface** and the **physical load** the magnet must hold.

[6] **Packaging** requirements (Bulk vs. Individual).

[7] **In-hands date**.

[8] **Delivery Country**. (Note: For EU deliveries, request a REACH statement, as ECHA Candidate List substances >0.1% by weight trigger trigger supply-chain duties).

Next Steps: Submit this data to Zigpac. Standard quotes return in 1–6 hours (6–24 hours for complex engineering). Production initiates within 2 hours of payment confirmation.

