[Doc. Ref: ZIGPAC-BP-001]

Precision Packaging: The Low-Minimum Blueprint

A Buyer's Guide to Bag Types, Handle Diagnostics, and MOQ Economics.





ZIGPAC

THE FIXED-COST SEESAW

Visual State 1

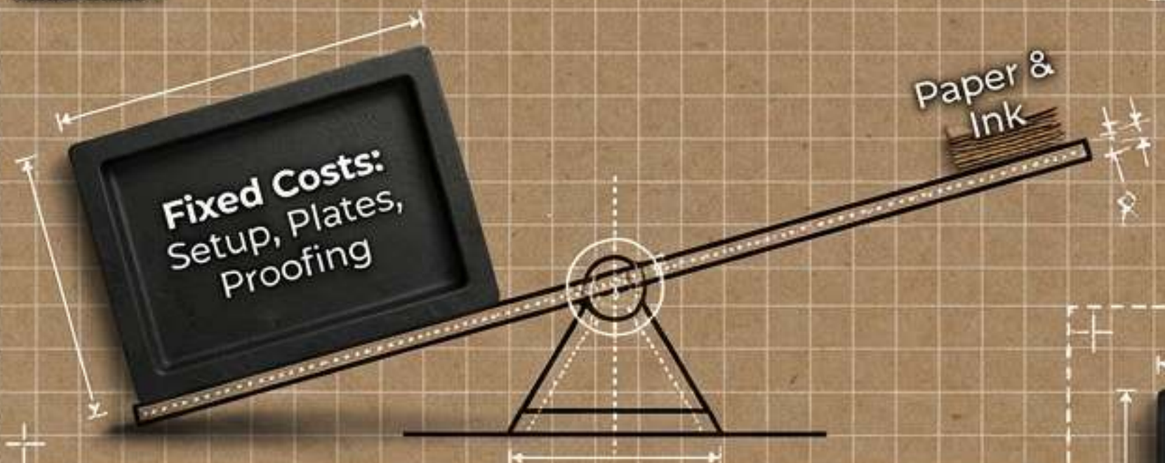

50 Bags:
Unit price unviable.

500 Bags:
The Viability Threshold.

Visual State 2

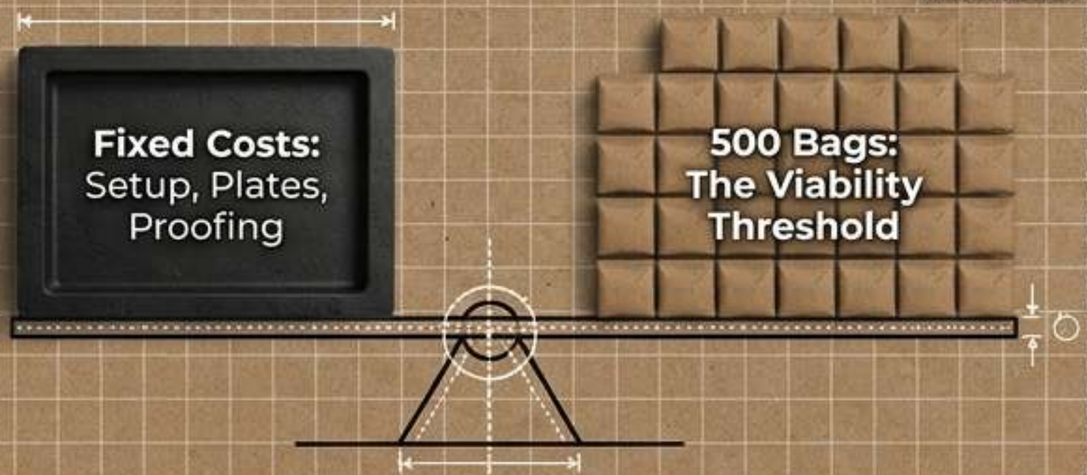

A realistic low minimum is a priced first tier, not 'no minimum.'
Most of what you pay on small runs covers preparation, not paper.
At Zigpac, 500 pieces is the first tier that absorbs fixed costs to make a fully custom bag affordable.

ZIGPAC



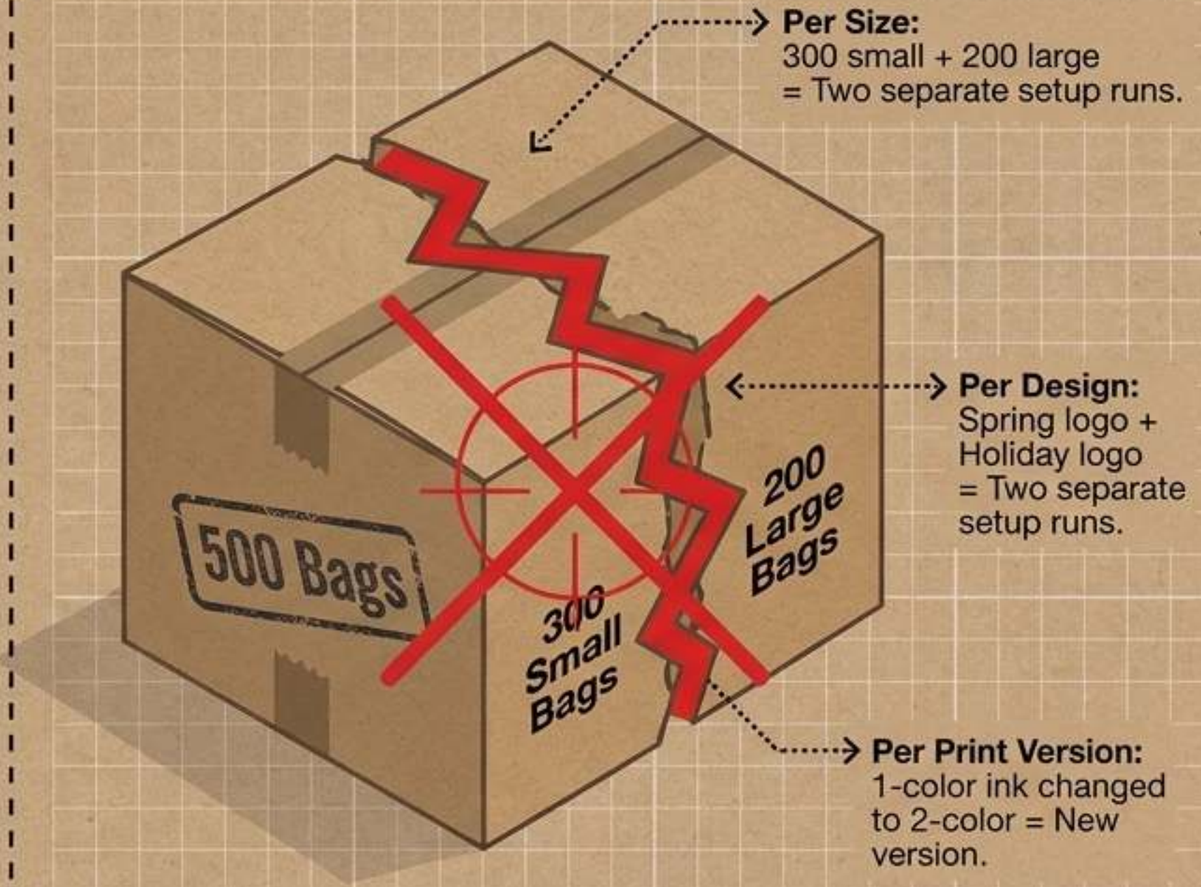

Consolidate to save. Fixing one size, one design, and one print version is the key to unlocking low-minimum economics.

ZIGPAC

THE MASTER BAG TYPE MATRIX

Bag Format		Material Look / Best Use Case	Baseline (500+)	Scaled (5,000+)
	Brown Kraft (Twisted)	Market default (66.4% of 2024 revenue). Boutiques, retail, cafes.	$0.55	$0.24
	White Kraft (Twisted)	Needs brighter, cleaner color (shows scuffs more easily).	$0.60	$0.26
	Kraft Takeout (Flat)	Counter pickup, carryout. Lowest cost format.	$0.32	$0.13
	Laminated Art Paper	Premium presentation (cosmetics, gifts).	$0.98	$0.48

Prices are Nov 2026 illustrative baselines per piece. Final MOQ & price confirmed on custom quote.

ZIGPAC

COST PER BAG STEP-DOWN WATERFALL CHART

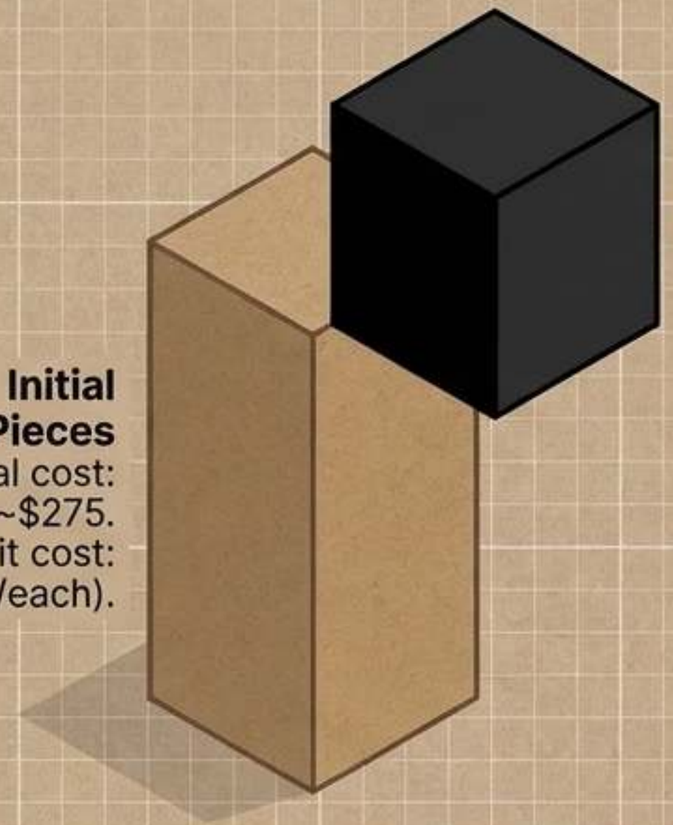

Initial 500 Pieces
Total cost: ~$275.
(Unit cost: $0.55/each).

Next 500 Pieces
Marginal cost: +$145.

1,000 bags total ~$420.

The Effective Price of the Extra 500: $0.29 per bag

If you anticipate needing 800 bags within a year, ordering 1,000 now costs $145 more than 500. Splitting that into two separate 500-piece orders later will cost $550. Always request quotes for 500 and 1,000 pieces side by side.

ZIGPAC

HANDLE ANATOMY & LOAD TESTING

TWISTED PAPER HANDLE

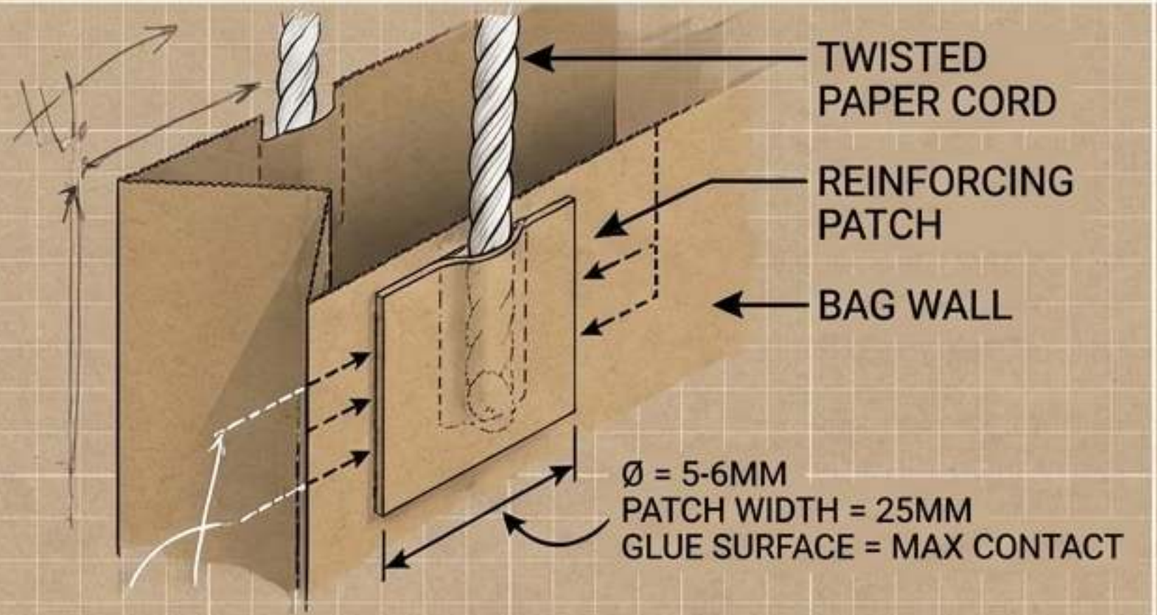

Typical Bag: Standard for retail/gifts.
Base Price: $0.55 (brown).
Diagnostic Check: Inspect the glue at the handle roots after filling with real product weight.

FLAT PAPER HANDLE

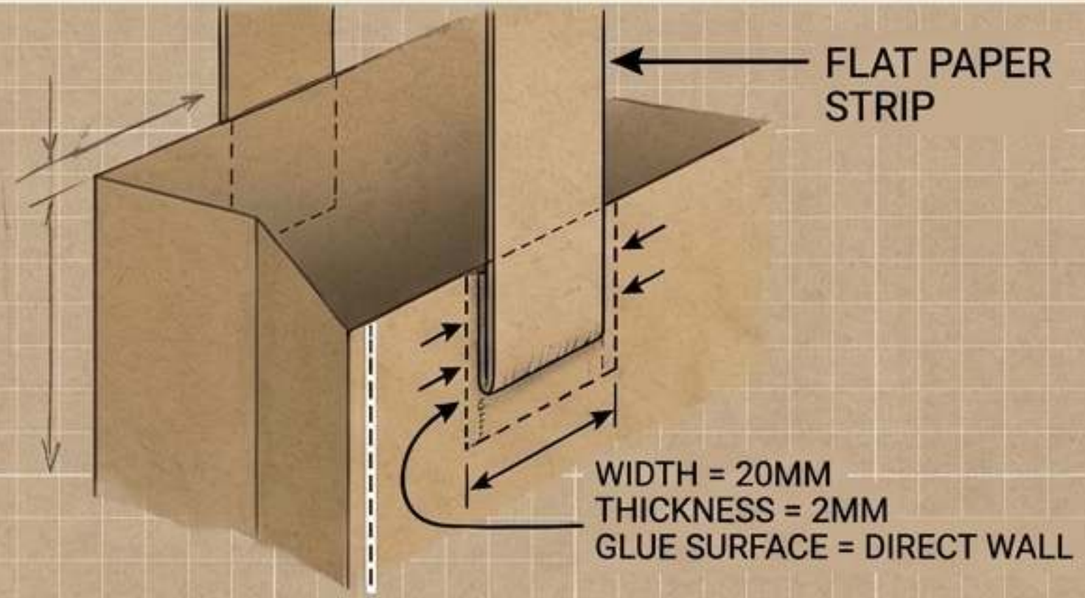

Typical Bag: Standard for takeout/lighter loads.
Base Price: $0.32.
Diagnostic Check: Inspect the strip attachment and top bag edge under tension.

WARNING: No universal load ratings are published. Variables include dimensions and load distribution. Always pack a physical sample with your actual items (including tissue/boxes), walk with it, and test the glue roots.

ZIGPAC

THE PREMIUM

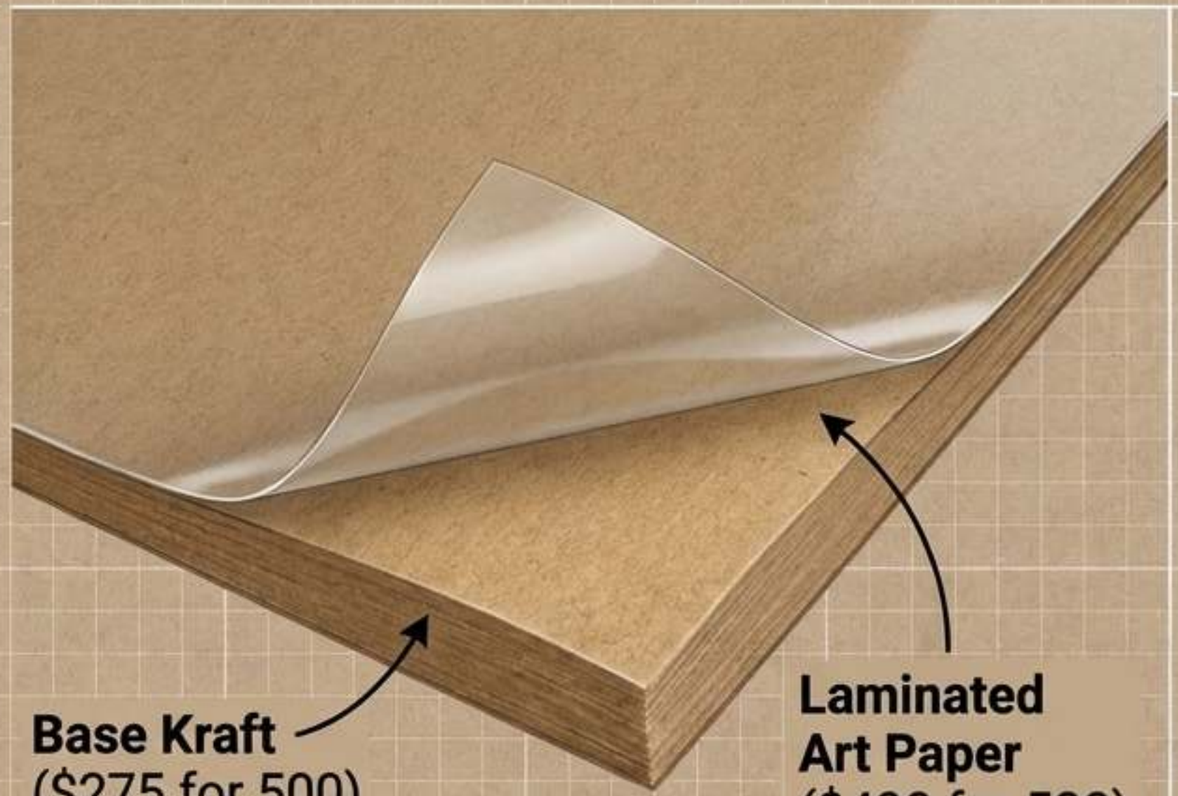

Lamination is a distinct material and an extra manufacturing process, accounting for the 1.8x price multiplier at 500 pieces.

THE VERDICT - WHEN IS IT WORTH IT?

Justified for: Cosmetics, high-end apparel, corporate gifts, or artwork requiring full-color/dark designs that uncoated kraft would mute.

Options: Gloss, Matte, Soft-Touch (must test physical samples as color shifts under film).

TECHNICAL TRUTHS

- ☒ It is **NOT** a waterproofing or durability rating.
- ☒ It turns the bag into a mixed-material item (subject to EU PPWR recyclability rules).
- ☑ Rope or ribbon handles are custom requests, not defaults.

ZIGPAC

THE LIFECYCLE IMPACT SCALE

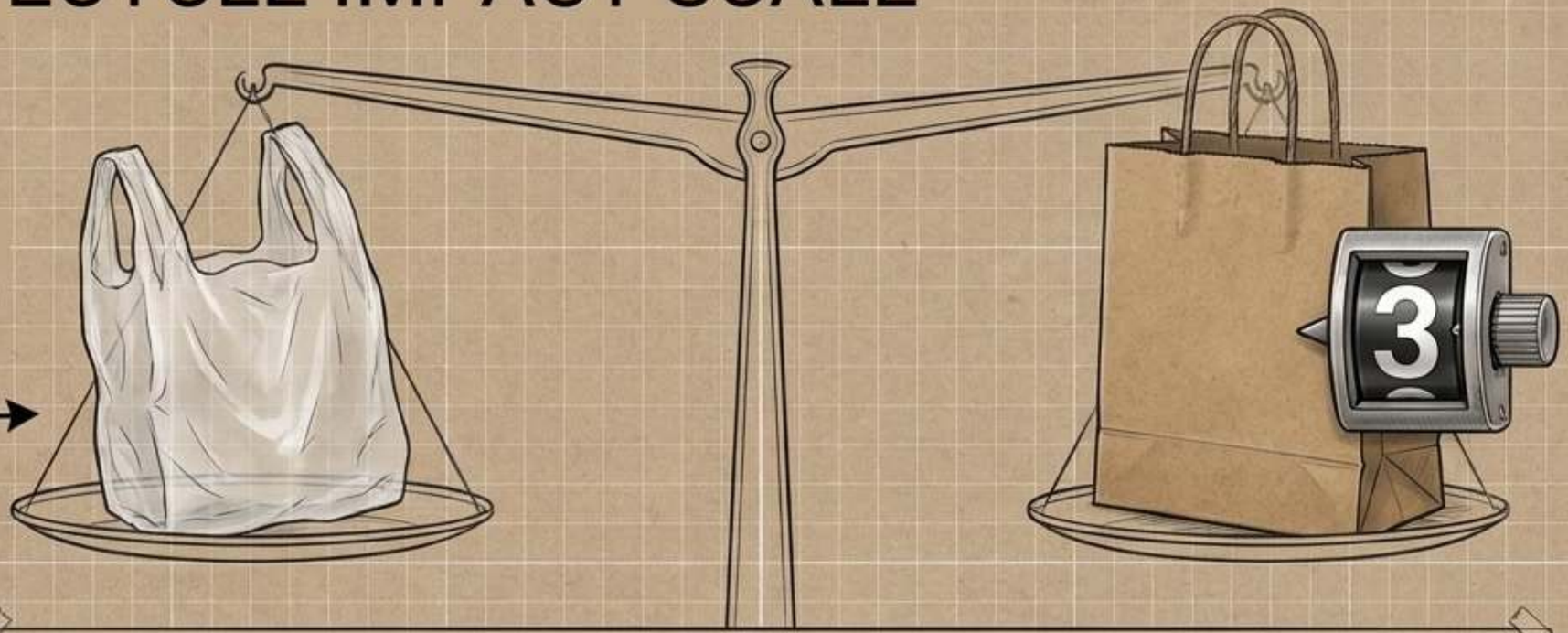

The *New York Times* reports that a paper bag must be reused approximately 3 times or more to match a single-use plastic bag on climate impact.

THE NATURAL DEFAULT:
Brown kraft remains the safe, low-cost choice for a natural aesthetic.

THE REAL METRIC:
Reuse shapes the environmental story far more than whether a bag is kraft or laminated.

ACTIONABLE ADVICE:
Designing a bag that customers actually want to keep and reuse is the most effective climate strategy.

ZIGPAC

Artwork Blueprint & Danger Zones

Keep logo and fine text clear of handle roots where print distorts.

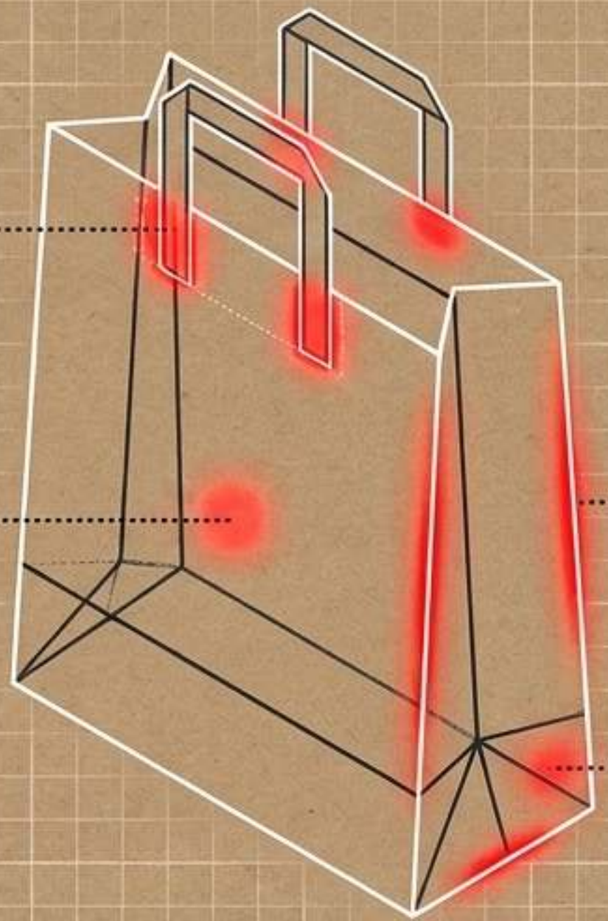

Avoid side seams and structural folds where ink can be covered or crack.

On brown kraft, avoid pale, thin lines which fade into the natural base shade. Use bold strokes or switch to white kraft.

Measurement Protocol: Measure your packed item. Include tissue, boxes, and inserts—not just the bare product. Always provide Finished Size as: Width × Gusset × Height.

ZIGPAC

Navigating Compliance: The California Standard

Since Jan 1, 2026, most grocery, pharmacy, convenience, and liquor stores in CA may only provide recycled paper carryout bags.

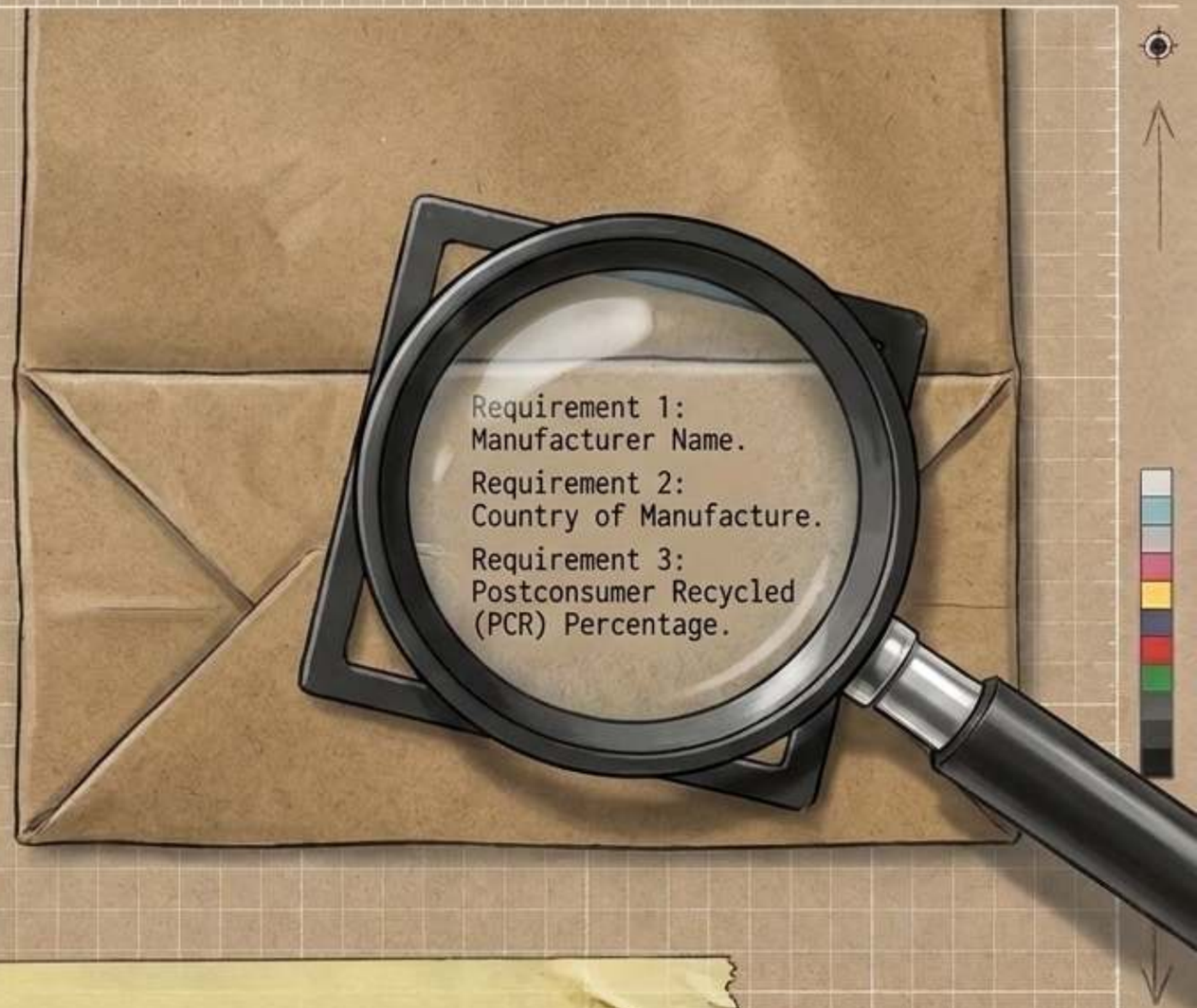

CALRECYCLE SB 270 UPDATE:
CALRECYCLE SB 270 UPDATE: Minimum recycled content requirement rises to 50% on January 1, 2028 (up from the previous 40% threshold). Raise state requirements before quoting to confirm material specs.

ZIGPAC

The Reverse Gantt Timeline

Free eProof.
Layout and positioning check. Approval is the last point where a change costs nothing.

Physical Sample.
(Optional but recommended). Costs $5-$30. Critical for checking color, finish, and handle roots.

Production Clock.
(7-10 Days standard). Note: Ask exactly what triggers this clock (eProof vs order confirmation).

Transit Time.
(Variable duration). Depends on destination and freight method.

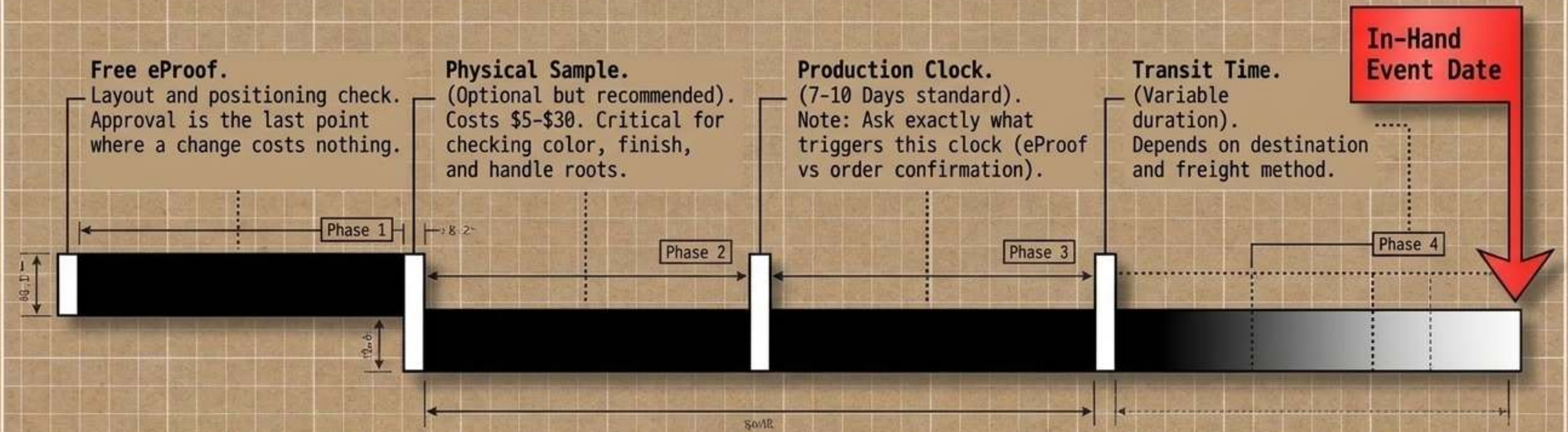

Do not plan using a single clock. Standard production is 7-10 days, but you must work backward from your event date, factoring in separate clocks for sampling, production, and freight.

ZIGPAC

The Formula for a Low-Minimum Order

REQUISITION TICKET: LOW-MINIMUM ORDER FORMULA
1. **Chassis:** [Select: **Brown Kraft** / White / Flat / Laminated] ▼
2. **Dimensions:** [Width] × [Gusset] × [Height]
3. **Payload:** [Typical Packed Weight including boxes/tissue]
4. **Artwork:** [Vector File] + [Ink Colors] + [Print Sides]
5. **Scale Test:** Requesting Side-by-Side Quote for **500** vs. **1000** pieces.

Final Checklist Callouts

- Ensure fixed variables: 1 Size, 1 Design, 1 Print Version.
- Request setup/plate charges, samples, packing, and freight to be listed separately for clean comparisons.

You are now equipped to submit a flawless specification. Zigpac will confirm the final MOQ, price, and schedule on your custom quote.

ZIGPAC