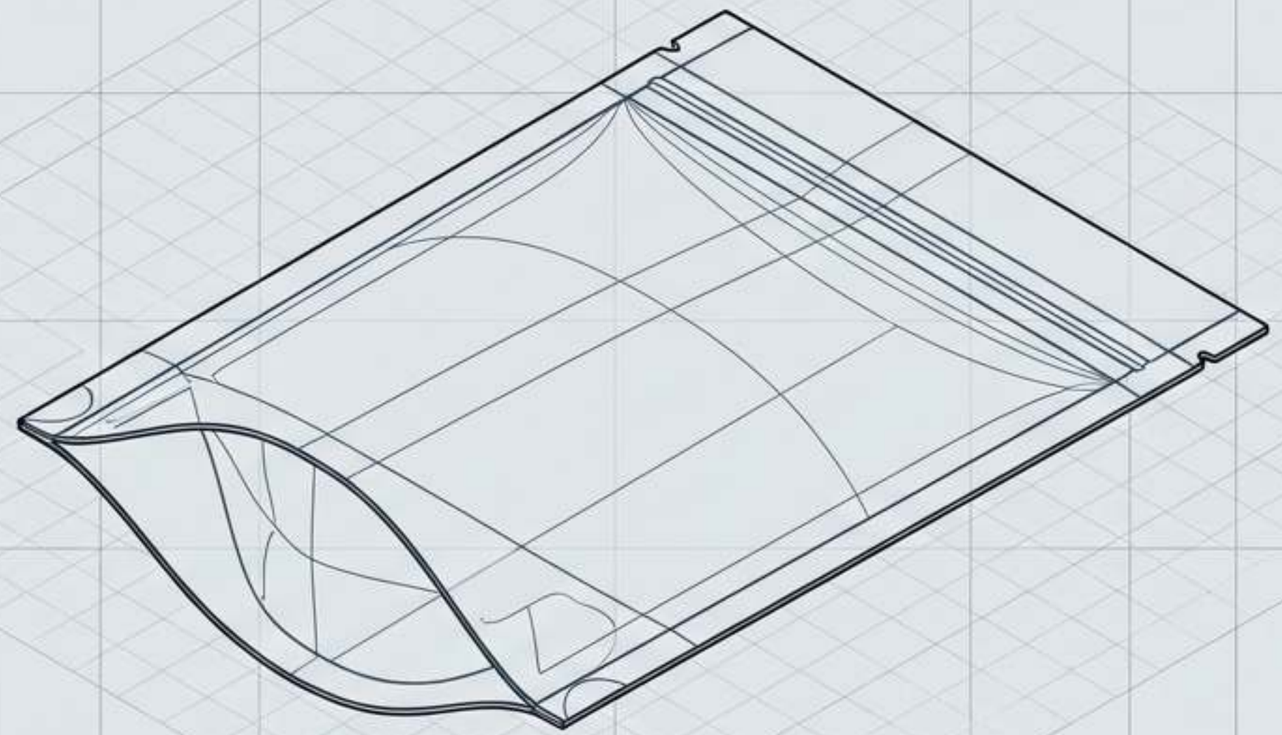

# Custom Center-Seal Pouches for Dry Products

## A Practical Buyer’s Guide & Specification Framework for ZPCPLB0002

ZIGPAC | Technical Reference

ZIGPAC

## The Common Mistake

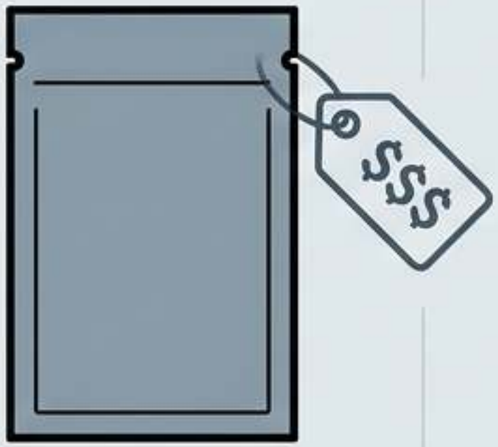


Buying based on nominal bag size and generic shelf-life promises.

**Powder trapped in seals, hidden artwork, filling-line rejections, and delayed deliveries.**

## The Shared Specification

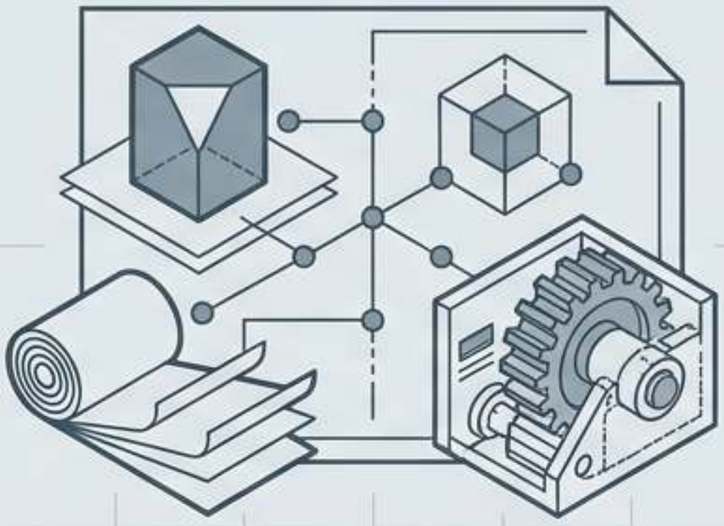

Building a shared specification based on product, filling conditions, and film structure.

**Equivalent packaging comparisons and validated production.**

**A pouch that looks right can still be wrong for the job.**
**Success requires a shared specification, not just a shared price.**

ZIGPAC

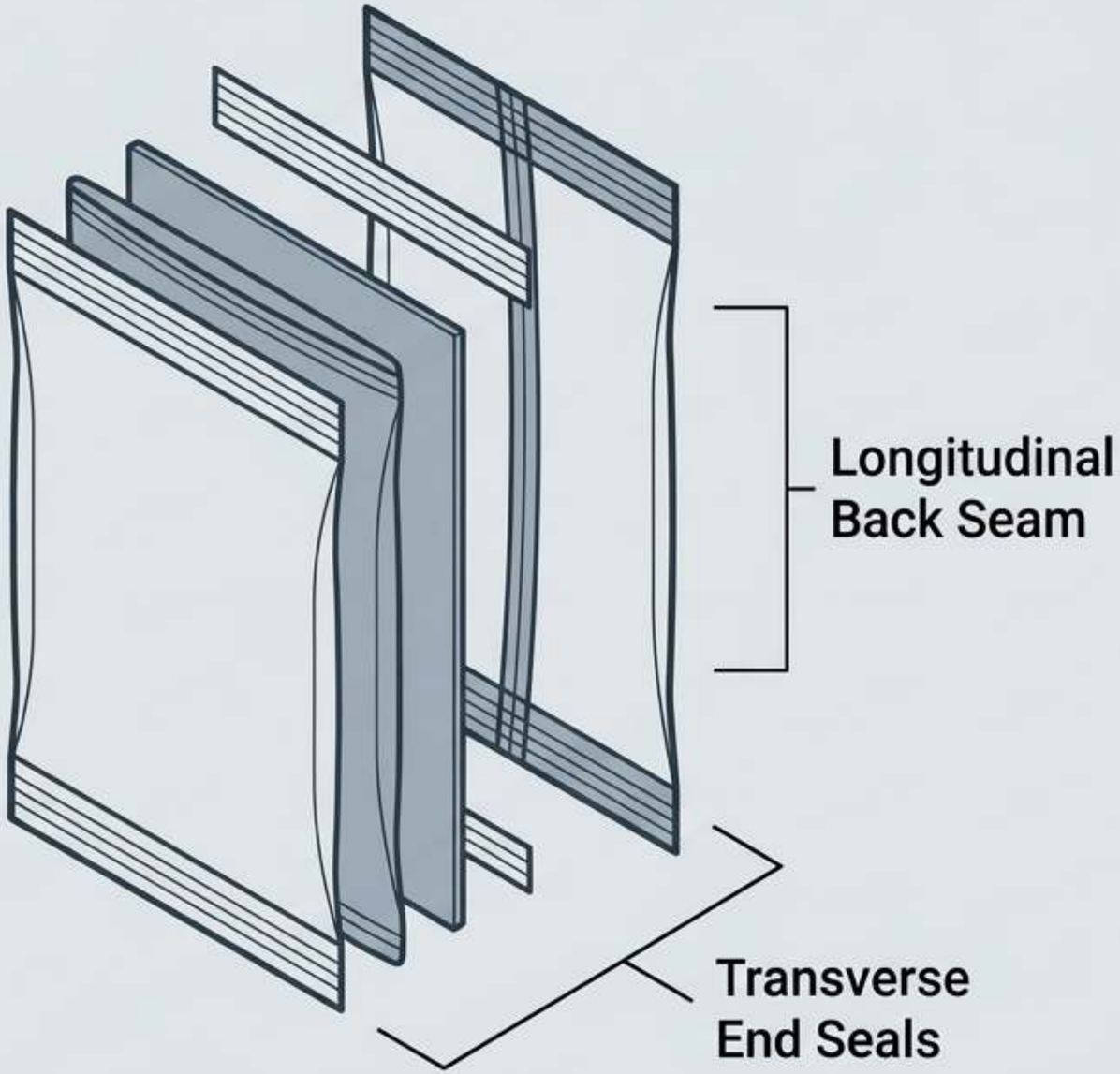


## Defining Features

When filled and closed, this format develops a pillow-like profile.



This is a flat pillow pouch. It is NOT a bottom-gusseted stand-up pouch, even though both belong to the Custom Plastic Bags category.

ZIGPAC

# Structural Clarification: Fin vs. Lap Seals

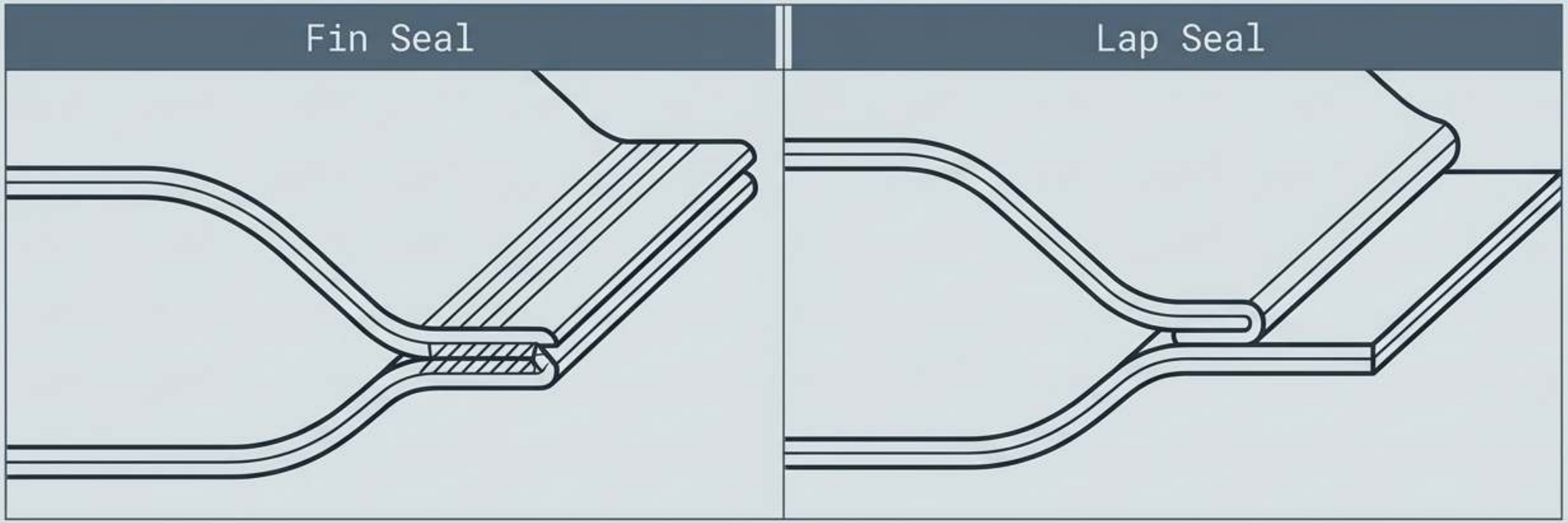


These names overlap with terms like pillow pouch or back-seal pouch, but terminology does not replace a construction drawing.

Construction name alone does not guarantee stronger seals. Both require specific material compatibility validated against your filling equipment.

# Supply Format: Premade vs. Rollstock

## Premade Pouch

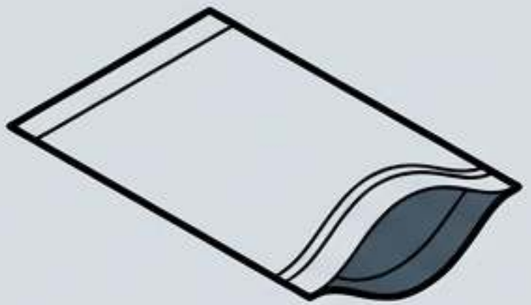

Filled through designated opening by the packer, then sealed.

## Rollstock

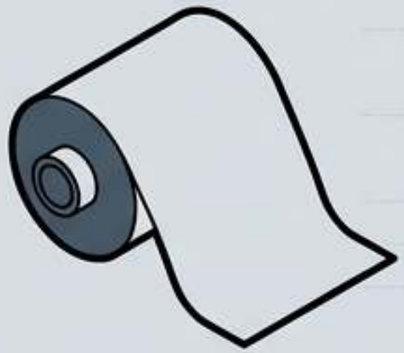

Formed, filled, and sealed on suitable form-fill-seal (FFS) equipment on the production line.



A drawing of the finished pillow shape does not make these supply formats interchangeable. Define the supply format before requesting prices.

ZIGPAC

# The Specification Framework

| | Specification Field | What to Record | What Remains Subject to Approval |
|---|---|---|---|
| 1 | Dimensions | External width/length (mm) & filling opening | Usable volume and filled shape |
| 2 | Film | Layer sequence & total thickness (µm) | Barrier, sealing, and handling performance |
| 3 | Seams | Fin/lap construction, seal locations & widths | Compatibility with material and equipment |
| 4 | Artwork | Front, back exclusions, code positions | Readability and print approval |

This is a planning framework. No product-specific factory measurements, MOQ, lead times, or unit weights are established here. These require an item-specific quotation.

# Mapping Usable Space vs. Nominal Dimensions

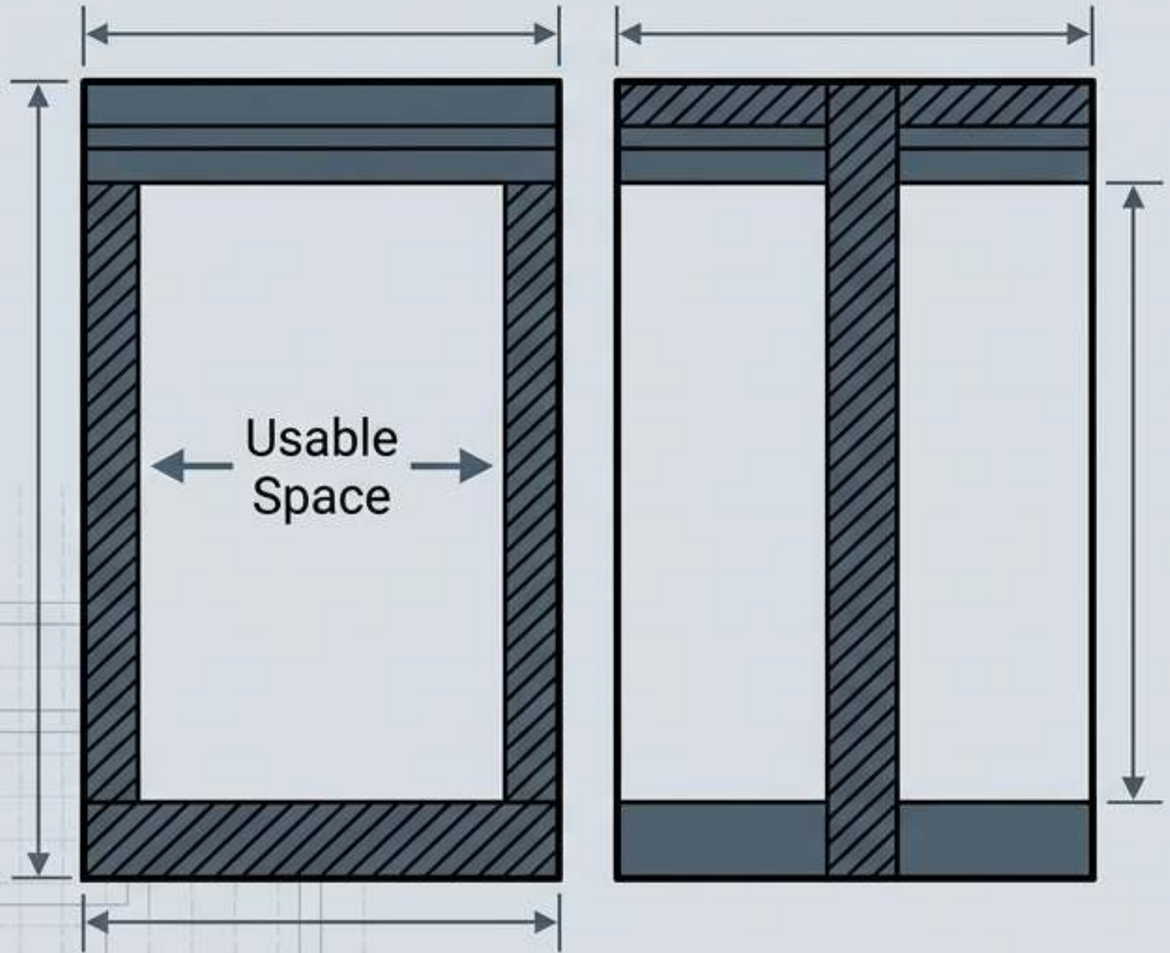


Record product form, net weight, bulk density, oiliness, powder content, and sharp edges.

Identify the exact area reserved for final closure on the drawing.

Capacity depends on loaded condition and actual dimensions, not the outside rectangle.

Lightweight bulky contents and dense granules cannot be assigned the same capacity simply because the outer pouch dimensions match.

ZIGPAC

# Material Candidates: Laminate Diagnostic

| Candidate Structure | Reason to Evaluate | Decision Boundary |
|---|---|---|
| PET/PE | Transparent laminate route | Do not assume adequate protection for oxygen-sensitive or long-shelf-life contents. |
| PET/VMPET/PE | Metallized barrier route | Metallization is not equivalent to an aluminum-foil layer. |
| PET/AL/PE | Opaque foil-laminate route | Assess cost, handling, and end-of-life limitations. |
| Mono-material PE | Possible compatible recycling stream | Validate sealing/barrier; verify collection eligibility separately. |



Material names do not establish OTR or WVTR. Request OTR/WVTR testing under matching temperature/humidity conditions. Foil/metallized candidates are strictly not microwave-ready.

# Structural Integration: Seams & Finishes

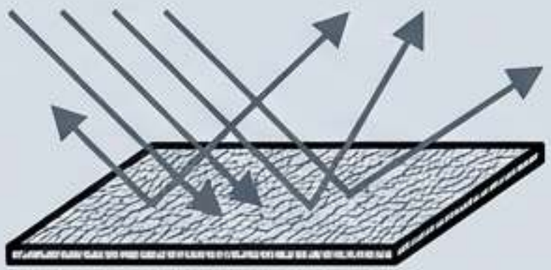

Matte

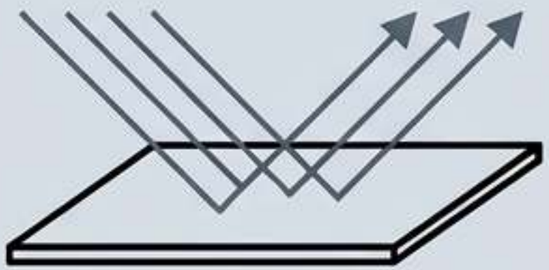

Gloss

Assess appearance directions on physical samples.

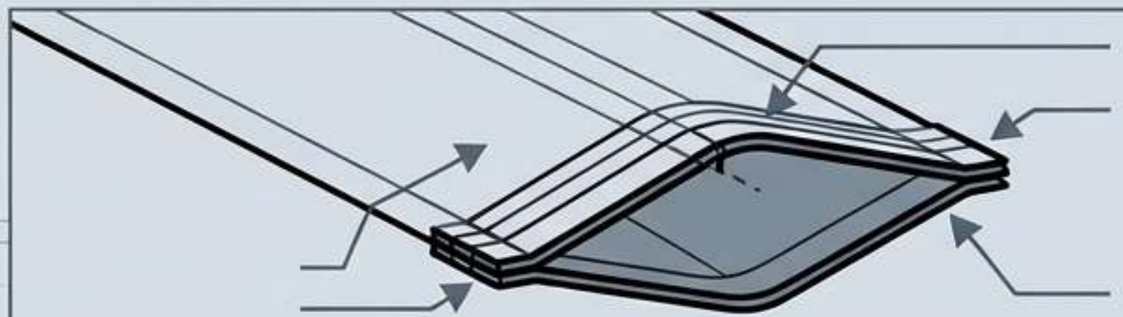

The back seam is the structural closure detail—not a clip, clasp, or detachable fastener. Review the folded seam profile alongside the finish so the reverse remains practical to read.

Zippers, valves, tear notches, and hang holes must be assessed against the required sealed area. They are not default features.

ZIGPAC

# Artwork Preflight: Avoiding Hidden Graphics

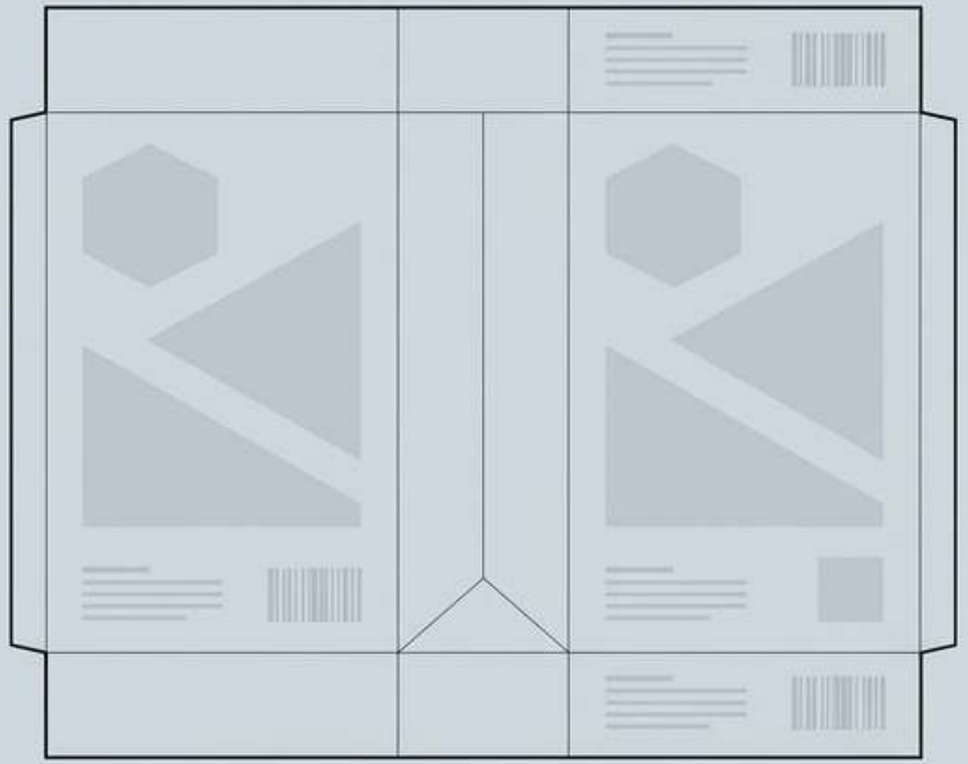

Place essential copy away from seams and cuts. Check orientation after forming.

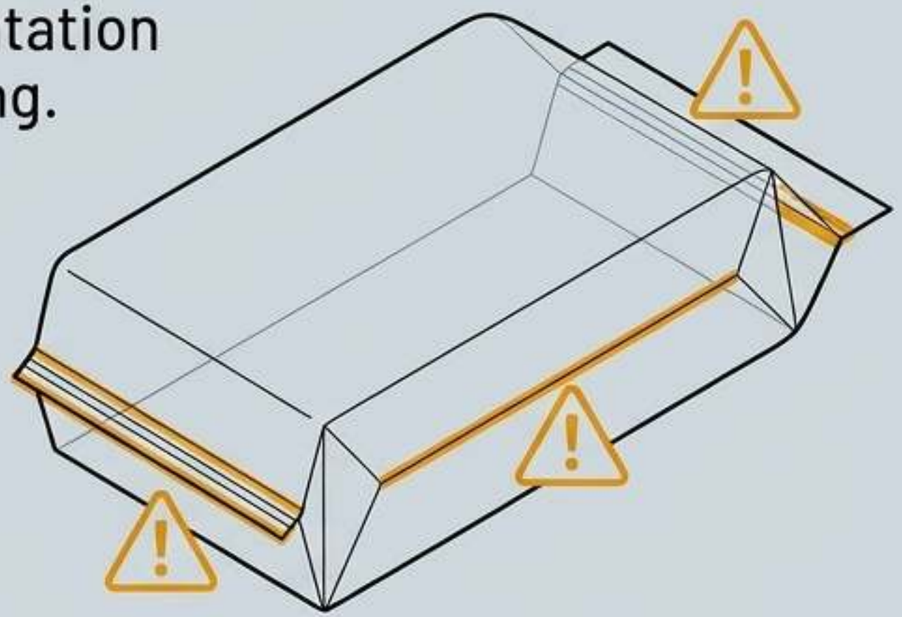

Digital proofs confirm layout; they do not establish final film feel, filled shape, or seal performance under actual lighting.

ZIGPAC

# The Production Validation Loop

**1. Establish Filling Route**

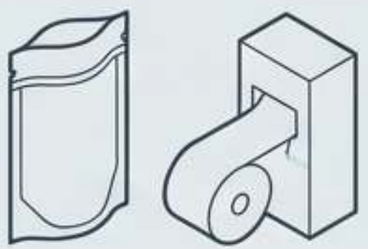

(Premade closure vs. FFS web/roll specs)

**2. Supply Equipment Requirements**

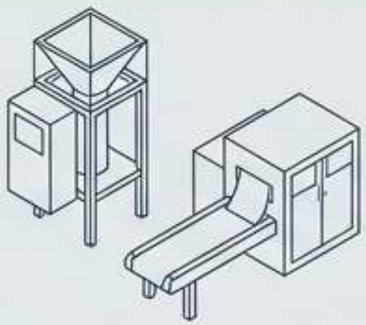

(Vertical or Horizontal FFS compatibility)

**3. Trial Candidate Structure**

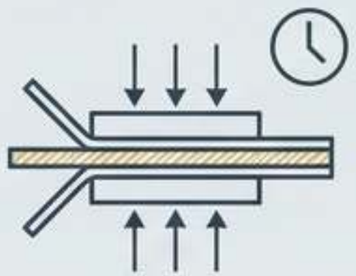

(Temp + Pressure + Dwell Time)

**4. Record Acceptable Operating Window**

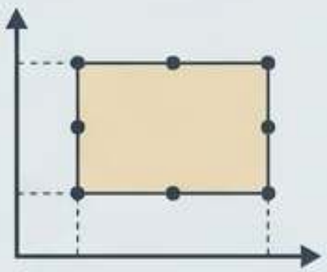

⚠ Compatibility must be demonstrated. Record the operating window, not just one successful setting. A change in laminate or seal construction requires a completely new review, not review, not automatic reuse of previous settings.

# Targeted Inspection Zones

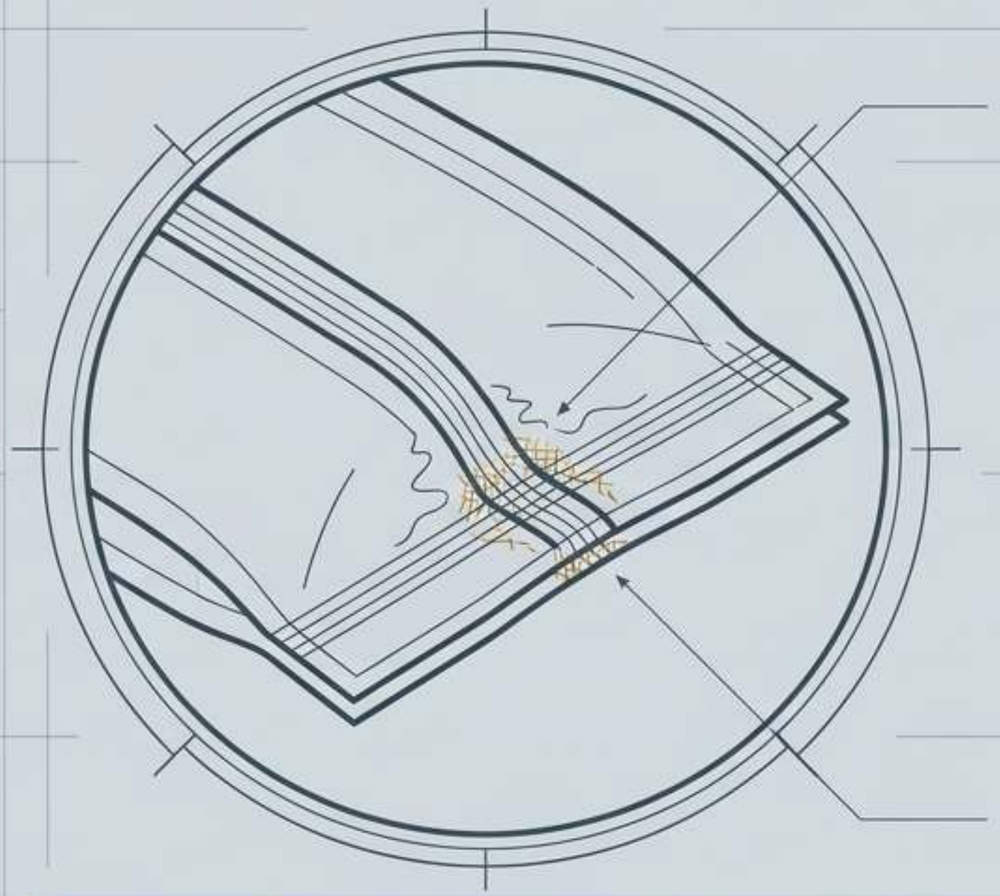

## Diagnostic Focus

Wrinkles, contamination (product dust), and local thickness changes at these junctions interrupt sealing.

A visually closed pack is not proof of leak integrity. Furthermore, a strong strip of seal **does not rule out a hole elsewhere in the package.**

ZIGPAC

# Acceptance Plan: Testing Methodologies

| Check | Method to Specify | Important Limitation |
|---|---|---|
| Seal Strength | ASTM F88/F88M (report width/mode) | Strength alone does not establish freedom from leaks. |
| Leak Integrity | ASTM D3078 (headspace) or F2096 | Gross leak F2096 is destructive; detection limits must match pack. |
| Burst Resistance | ASTM F1140 or F2054 | Results depend on the chosen setup fixture. |
| Dye Penetration | ASTM F3039 (nonporous) | Do not substitute porous medical methods. |
| Transport Stress | Handling, drop, altitude conditioning | Conditioning alone is not a leak test. |

A generic quality certificate cannot replace evidence tied to your proposed pack. Resolve observed failures before authorizing production.

# Compliance Validation

## Food Contact (US/FDA)

Cites 21 CFR 177.1520. Covers specified olefin polymers. Unrestricted “FDA approved pouch” claims are invalid; review specific layers, inks, and adhesives for intended use.

## Recycling (US)

How2Recycle Store Drop-off guidance. Mono-material PE does not automatically qualify for curbside collection. Confirm the complete pack and collection route.

EU packaging rules (including food-contact PFAS restrictions applying from Aug 2026) require destination-specific compliance assessment. US documentation alone does not establish EU compliance.

No factory certification, product-specific food-contact approval, or recycling-label authorization is asserted here.

# Shipping & Reorder Specifications

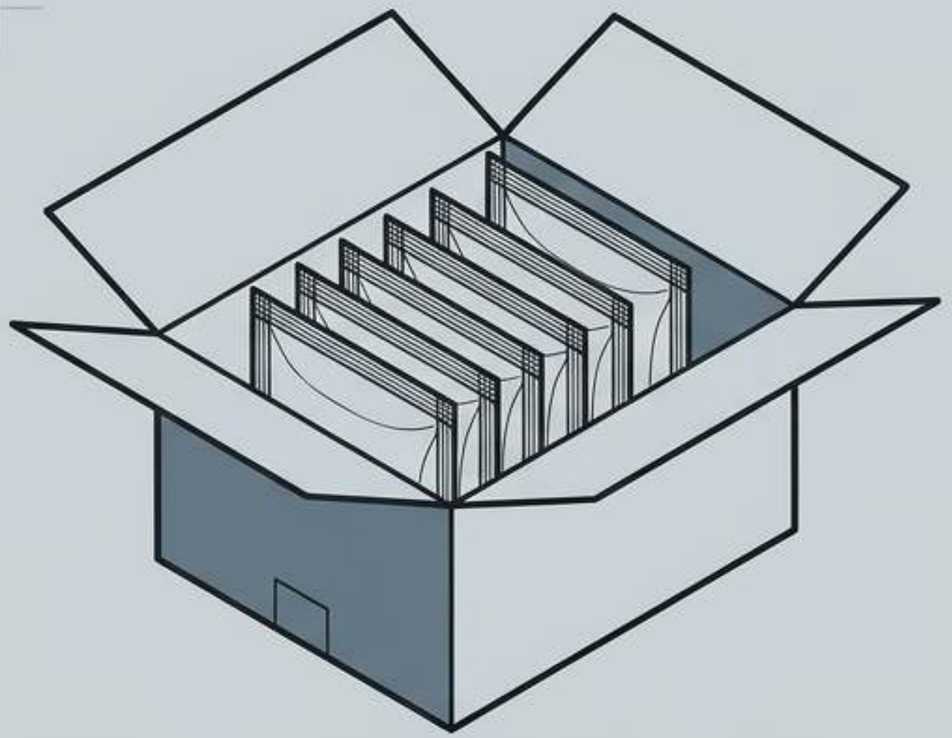

Agree **packing orientation, carton loading,** and **protection** against compression/puncture. Carton quantities and load limits require sample validation. An empty-bag photograph cannot establish carton limits.

## Reorder Checklist

Preserving the Spec: For repeat orders, identify:

- ▫ Approved dimensions
- ▫ Laminate structure
- ▫ Artwork revision
- ▫ Seam geometry
- ▫ Batch reference

# Format Decision Matrix

| Format | Priority it Addresses | Trade-off to Evaluate |
|---|---|---|
|  Center-seal flat | Dry packing, clear front, pillow geometry. | Limited self-standing presentation. |
| 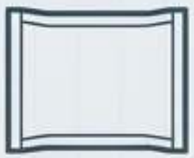 Three-side-seal | Flat presentation, small portions. | Usable space/filling access. |
|  Side-gusset | Added volume, different profile. | Complex folds/local sealing. |
|  Stand-up pouch | Upright retail, repeat-opening. | Different construction/material use. |

This identifies design priorities, not guaranteed rankings for price or leak resistance.
Do not try to make a flat pillow pack behave like a stand-up bag.

# Print Economics: Digital vs. Gravure

## Digital Printing

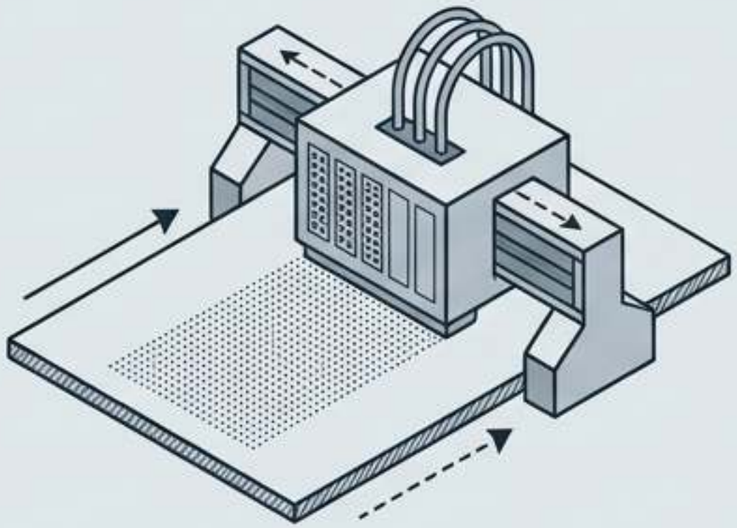

Best for pilots, frequent artwork changes, and multiple designs.

A **lower unit price** can be misleading when it requires holding more printed inventory than the product launch can actually use. Compare the complete order commitment.

## Gravure Printing

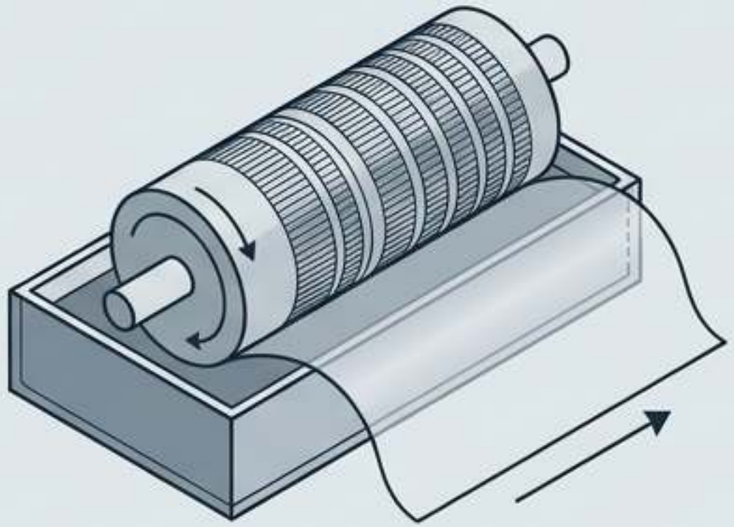

Best for sustained quantities where cylinder setup costs can be spread across the run.

**Crucial Insight:** Neither print process establishes barrier performance.

ZIGPAC

# Turning the Brief into a Comparable Quotation

## Quotation Checklist

- ☐ Defined product details & distribution requirement
- ☐ Target external dimensions & filling opening
- ☐ Quantity required per design
- ☐ Filling method (Premade vs Rollstock)
- ☐ Candidate materials & acceptance checks
- ☐ Delivery market (US, EU, etc.)

Requesting quotes this way guarantees a comparison of equivalent packaging, rather than unrelated prices or an isolated low quote based on a photograph.

MOQ, unit price, production duration, and delivered lead time require this project-specific quotation.
Note: Manufacturing time is not delivery time to a US warehouse.

# Finalize Your Shared Specification

Stop buying generic sizes. Start engineering the exact package for your filling line.

**Request your custom quotation for SKU ZPCPLB0002 today.**