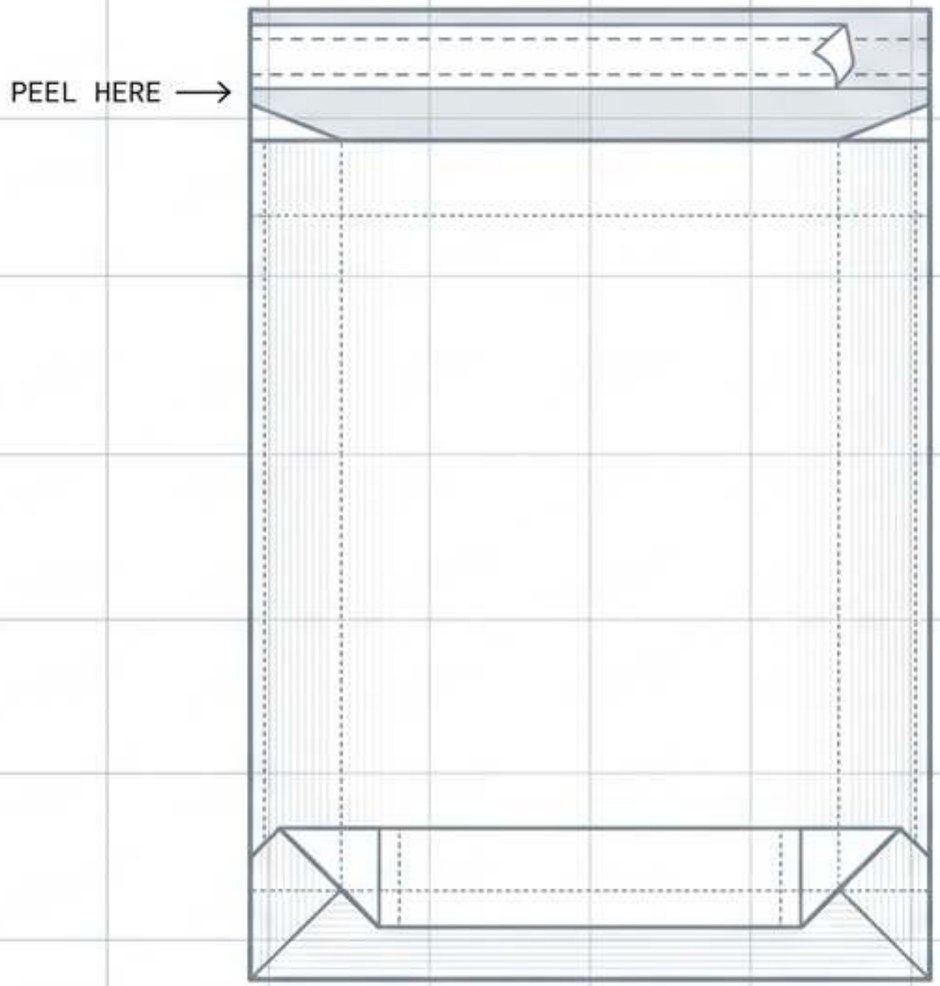

Custom Poly Mailer Procurement: A Diagnostic Blueprint

Specifying, evaluating, and **purchasing** flexible shipping packaging for apparel and soft goods.

[REF: ZPCPLB0003]

ZIGPAC

Format Boundaries: Flexible vs. Protective

	Flexible Poly Mailer (ZPCPLB0003)	**Rigid / Protective Packaging**
Apparel & Folded Textiles	 **Suitable** — Serves as a flexible outer layer.	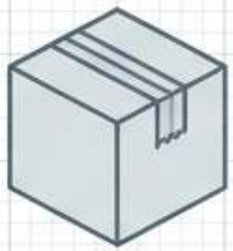 **Over-specified** — Unnecessary for non-fragile items.
Glass, Sharp Components, Pristine Corners	 **Unsuitable** — Lacks cushioning, compression resistance, or puncture protection.	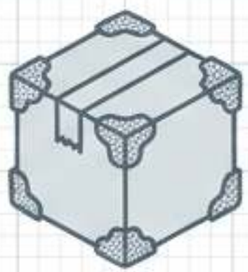 **Required** — Concentrated contact points need structural defense.

Core Caveat Panel: Neither the print nor the word ‘mailer’ establishes cushioning or a safe load. A thicker film does not turn a flexible envelope into a protective box.

ZIGPAC

The Nominal vs. Usable Dimensional Trap

The Failure

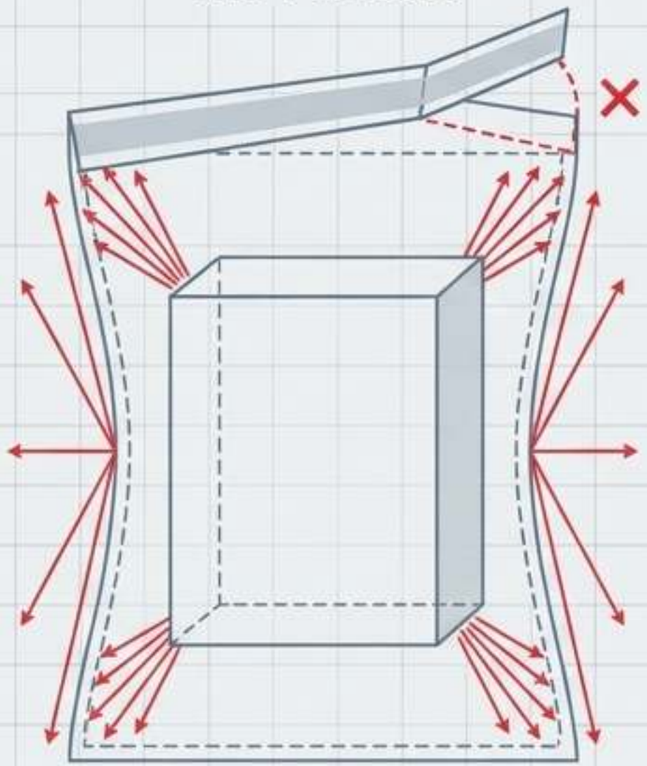

Putting a rigid box inside a bag does not make the contents flexible.

The Success

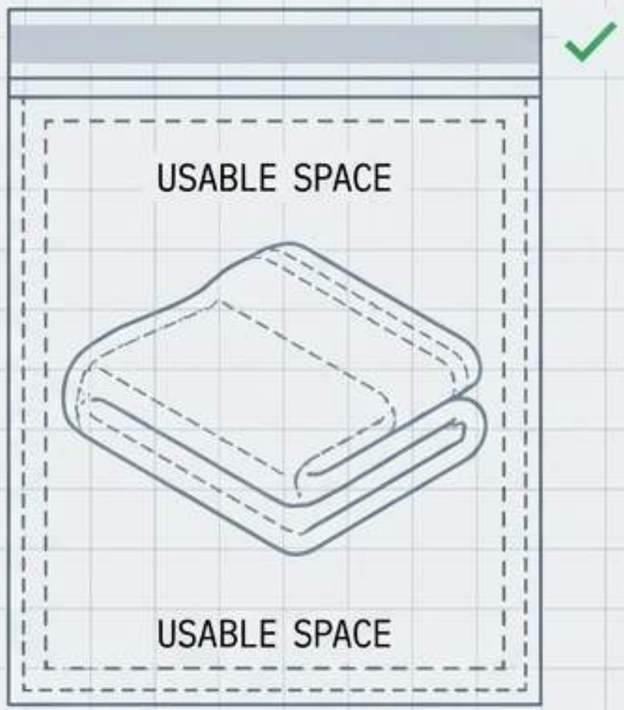

Usable space respects clearance tolerances and ensures closures lie perfectly flat.

- A distinctive print cannot compensate for a strained seam or a failing closure.
- Nominal dimensions do not establish capacity or load suitability.
- Evaluate the finished parcel against actual carrier dimensions, not assumptions.

Calculating Usable Dimensions Before Quotation

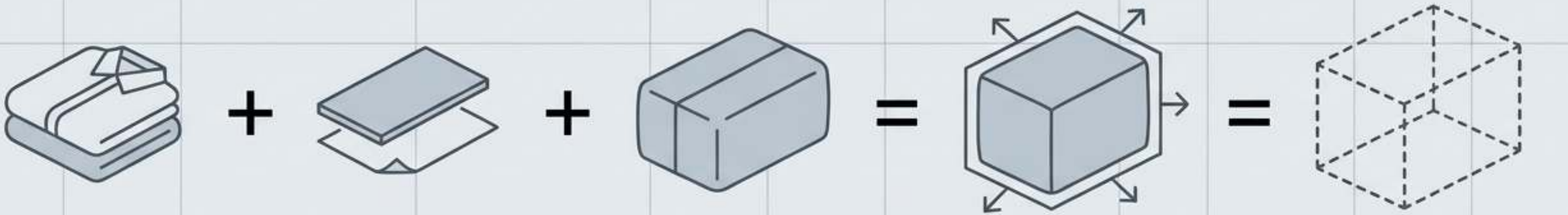

[Icon: Folded Garment] + [Icon: Inner Tissue / Insert] + [Icon: Intended Packed Volume] = [Icon: Clearance / Movement Tolerance] = [Icon: Required Usable Internal Dimensions]

Quotation Requirements

- Record accurate length, width, depth, and actual packed weight.
- Explicitly distinguish external dimensions from usable internal space.
- Confirm with the supplier if their stated length includes the flap.
- Demand any gusset be described separately to accurately compare usable space across competing quotes.

Film Thickness: A Metric, Not a Guarantee

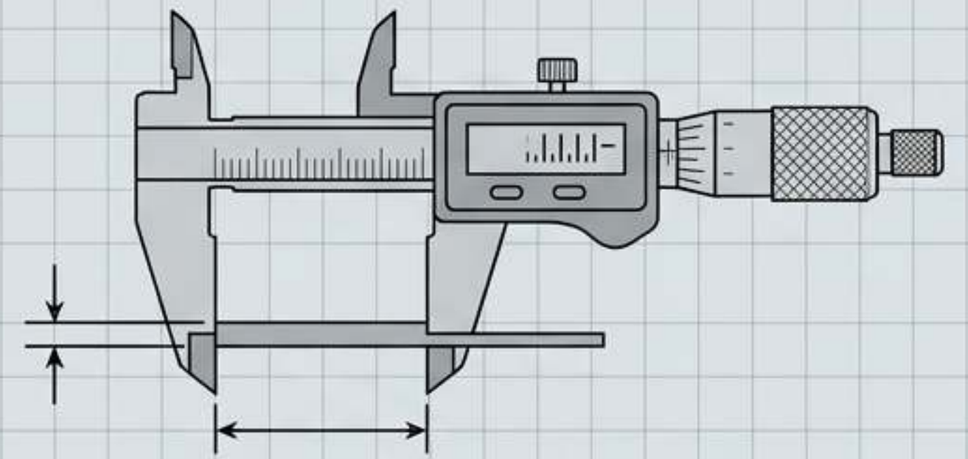

	Reference Thickness	Equivalent (µm)	Quotation Use Case
1	2.0 mil	50.8 µm	A thinner comparison point for evaluating light, soft contents.
2	2.5 mil	63.5 µm	A common reference point for standard apparel mailers.
3	3.0 mil	76.2 µm	A thicker comparison point when assessing puncture or handling concerns.

1 mil = 25.4 µm
WARNING: These are market-reference thicknesses, not available specifications or load ratings for ZPCPLB0003.
ACTION: Request the film measurement basis and agreed tolerance; compare resin construction alongside thickness.

Mapping Surface and Closure Details

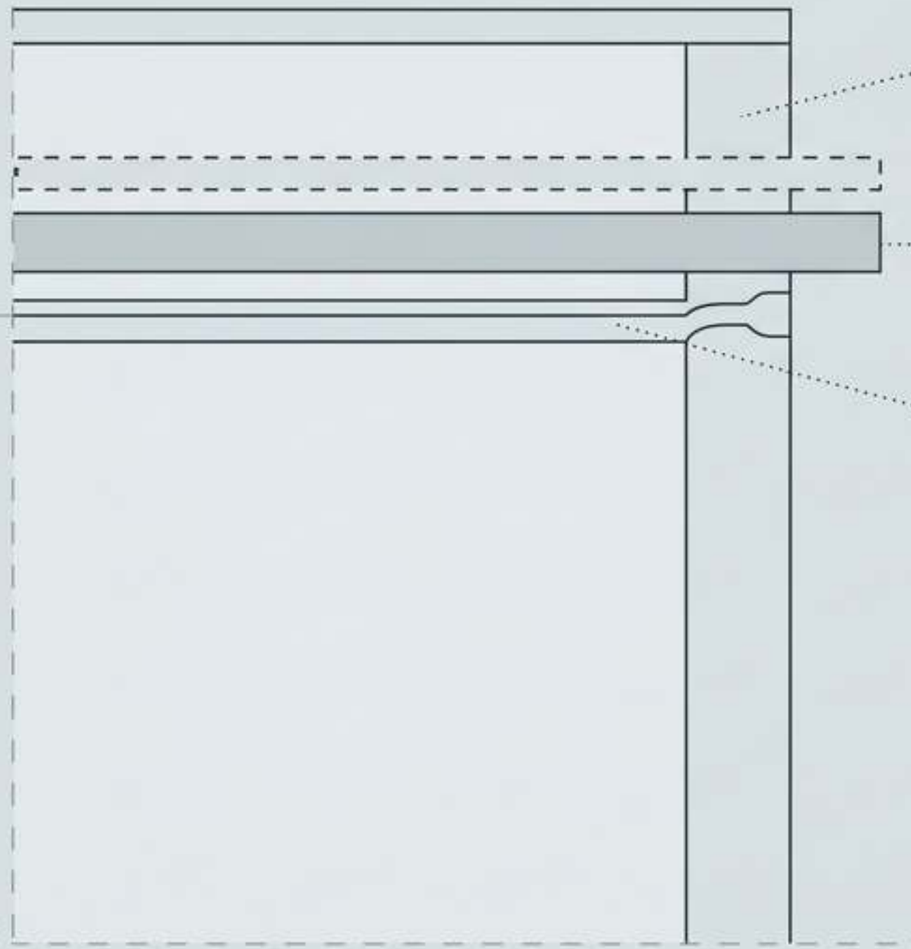

Surface & Opacity:

Limit visibility of contents. Require physical inspection with actual packed product under strong light.

Adhesive Flap:

Must fully contact a flat surface to support consistent closing. Requires physical closure demonstration.

Opening Features & Second Strip:

Evaluate opening convenience and potential return use. Requires outbound-to-return sample trial.

RISK MITIGATION:

A second strip does not prove a used bag remains fit for another shipment. "Tamper-evident" closures are not theft-prevention certifications. These are requested features, not a confirmed option menu.

Artwork Preflight Map: Printing on Flexible Film

- ☐ Supply vector logos; check raster art at true output size.
- ☐ Specify color references; monitor previews are insufficient.
- ☐ Test any printed QR code on a physical curved sample.
- ☐ Start with a production template, do not stretch social graphics.

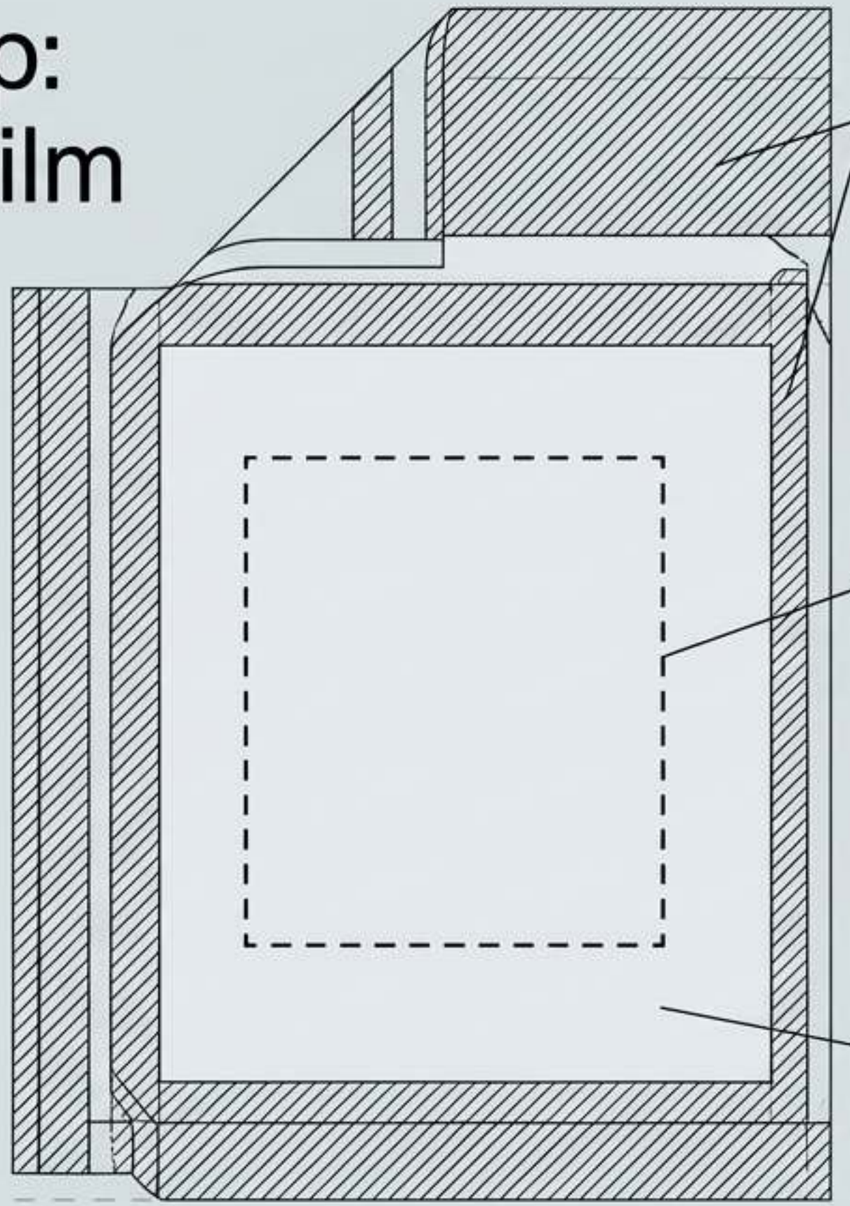

Distortion Zones:
Keep important content away from folds, seams, and opening edges.

Clear Zone:
Preserve a distinctly flat,unprinted location for the shipping label.

Printable Area:
Define exact required bleed and verify if proposed process supports desired coverage.

ZIGPAC

The Physical Validation Gate



- Dimensions & Thickness: Measure against spec and tolerance. Retain readings and sample ID.
- Seams (Side/Bottom): Inspect under representative loading for opening, splitting, or deformation.
- Completed Shipment: Conduct handling/drop evaluation using actual representative contents.
- Adhesive Closure: Seal using intended packing method; assess reopening behavior.
- Printed Surface: Check registration, background show-through, odor, and rub/adhesion performance.

CAUTION: A digital proof cannot establish seam strength, opacity, or ink adhesion. Hand checks can reveal problems but are not standardized laboratory results. Sample checks reduce purchasing risk but do not replace formal testing if required.

The Approval Sequence Chevron

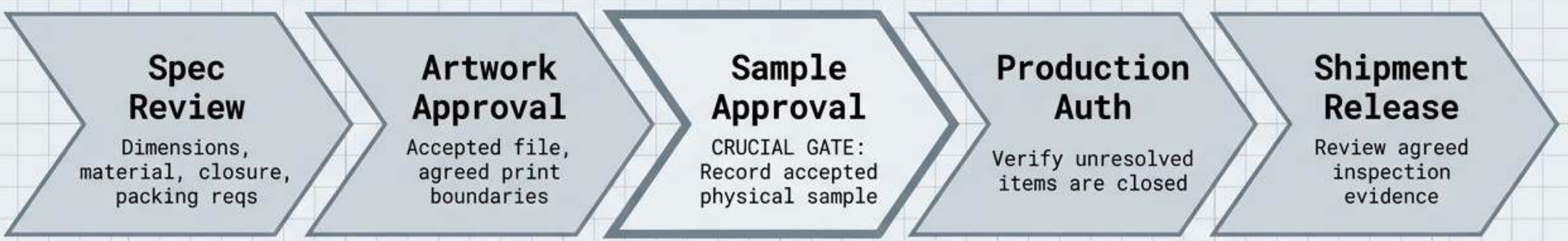

Ask the supplier exactly which approval event starts the production clock. A production estimate is not an arrival commitment. Keep MOQ, production time, and unit weight explicitly pending in the quotation.

Purchasing Route Diagnostic Matrix

	Digital Printed	Conventional Volume	Stock + Sticker
Best Use Case	Agile artwork changes, initial trials, smaller quantities.	Stable artwork, predictable replenishment.	Uncertain demand, frequent brand pivots.
Core Trade-Offs	Higher unit cost per bag.	High setup costs, larger inventory commitment.	Separate labeling operation, less integrated presentation.
Required Confirmations	Print area limitations and material choices.	Plate costs and outer-carton dimensions.	Sticker adhesion to film surface.

Compare completed-package cost (including setup, plates, samples, freight) rather than bag price alone. Specify front-only vs. double-sided printing to ensure quotes are truly equivalent.

The Three-Tiered Sustainability Funnel



Keep compostable materials separate from conventional PE specs. Avoid broad terms like “eco-friendly”. No recycled-content percentage or compostability certification is confirmed for ZPCPLB0003.

Anatomy of a Comparable Quotation

1. The Payload

- Exact packed dimensions
- Packed weight
- Inner packaging details

2. The Material Shell

- Mil thickness reference
- Required opacity
- Resin base

3. The Mechanical Features

- Closure type
- Exact flap length
- Specific gusset definition

4. The Visual Identity

- Approved vector art
- Defined clear zones
- Color references

5. The Validation Gate

- Agreement on sample quantity
- Test conditions
- Failure handling

The right printed mailer starts with a clear shipping requirement, not an unsupported promise. Define the packed product, approve measurable sample checks, and demand a specification-based quotation.